FMB920 User Manual
V0.04

Table of contents

1 INTRODUCTION 5

1.1 ATTENTION 5
1.2 INSTRUCTIONS OF SAFETY 5
1.3 LEGAL NOTICE 6
ABOUT DOCUMENT 6

2 BASIC DESCRIPTION 6

2.1 BASIC CHARACTERISTICS 7
BASIC CHARACTERISTICS 7
2.2 TECHNICAL FEATURES 8

PART NAME 8

2.3 TECHNICAL INFORMATION ABOUT INTERNAL BATTERY 9
LI-POLYMER RECHARGEABLE BATTERY, 3.7 V, 170 MAH. 9
FMB920 INTERNAL BATTERY IS USED FOR DETECTING EXTERNAL VOLTAGE DISCONNECTION. 9
BATTERY DISPOSAL INSTRUCTIONS: 9
2.4 ELECTRICAL CHARACTERISTICS 10
ABSOLUTE MAXIMUM RATINGS 10

3 CONNECTION, PINOUT, ACCESSORIES 11

3.1 HOW TO INSERT SIM CARD INTO FMB920 DEVICE: 11
3.2 INSTALLING FMB920 DRIVERS 12
3.3 ACCESSORIES 14

4 OPERATIONAL BASICS 16

4.1 OPERATIONAL PRINCIPALS 16
4.2 SLEEP MODE 16
4.3 VIRTUAL ODOMETER 17
4.4 FEATURES 17
4.4.1 Green Driving Scenario. 17
4.4.2 Over Speeding Scenario. 18
4.4.3 Jamming detection 18
4.4.4 Trip 18
4.4.5 CRASH DETECTION 19
CRASH TRACE OPERATION 19
CONFIGURATION 20
4.4.5 Configurator 20
SYSTEM SETTINGS 21
RECORDS SETTINGS 23
GSM SETTINGS, GPRS PART 24
GSM SETTINGS, SMS PART 25
GSM SETTINGS, OPERATOR LIST 26
DATA ACQUISITION MODE SETTINGS 27
FEATURES SETTINGS 31
4.4.6 Trip settings 32
4.4.7 SMS events 34
4.5 I/O SETTINGS 36

5 SMS COMMAND LIST 38

5.1 SMS COMMAND LIST 38
5.2 SYSTEM PARAMETERS 39
5.2.1 Sleep Mode (ID=102) 39
5.2.2 Sleep timeout (ID=103) 39
5.2.3 Movement Source (ID=100) 39
5.2.4 39
5.2.5 Static Navigation (ID=106) 40

5.2.6 Saving/Sending without time synchronization (ID=107) ... 40
5.2.7 GNSS Source (ID=109) ... 40
5.2.8 Ignition settings (ID=101) ... 41
5.2.9 High voltage level (ID=104) ... 41
5.2.10 ... 41
5.2.11 Low voltage level (ID=105) ... 42
5.2.12 Led indication (ID=108) ... 42
5.3 RECORDS PARAMETERS ... 42
5.3.1 Sorting (ID=1002) ... 42
5.3.2 Open Link Timeout (ID=1000) ... 42
5.3.3 Server Response Timeout (ID=1001) ... 42
5.4 GSM PARAMETERS ... 43
5.4.1 GPRS content activation (ID=2000) ... 43
APN Name (ID=2001) ... 43
5.4.2 APN username (ID=2002) ... 43
5.4.3 ... 44
5.4.4 APN Password (ID=2003) ... 44
5.4.5 Domain (ID=2004) ... 44
5.4.6 Target Server Port (ID=2005) ... 44
5.4.7 Protocol (ID=2006) ... 44
5.5 44
5.6 SMS SETTINGS ... 44
5.6.1 SMS data sending settings (ID=3000) ... 44
5.6.2 Data send number (ID=3001) ... 45
5.6.3 Authorized phone numbers (ID=4000-4009) ... 45
5.6.4 SMS Event Predefined Numbers (ID=6000-6009) ... 45
SMS Login (ID=3003) ... 45
5.6.5 SMS Password (ID=3004) ... 45
5.6.6 Incoming call action (ID=3005) ... 46
5.6.7 Operator List (ID=5000-5049) ... 46
5.7 DATA ACQUISITION MODES PARAMETERS ... 46
5.7.1 Home Network GSM operator code "Vehicle on STOP" parameters ... 46
5.7.1.1 Min Period (ID=10000) ... 46
5.7.1.2 Min Saved Records (ID=10004) ... 46
5.7.1.3 Send Period (ID=10005) ... 46
5.7.2 Home Network GSM operator code "Vehicle MOVING" parameters ... 47
5.7.2.1 Min Period (ID=10050) ... 47
5.7.2.2 Min Distance (ID=10051) ... 47
5.7.2.3 Min Angle (ID=10052) ... 47
5.7.2.4 Min Speed delta (ID=10053) ... 47
5.7.2.5 Min Saved Records (ID=10054) ... 48
5.7.2.6 Send Period (ID=10055) ... 48
5.7.3 Roaming Network GSM operator code "Vehicle on STOP" parameters ... 48
5.7.3.1 Min Period (ID=10100) ... 48
5.7.3.2 Min Saved Records (ID=10104) ... 48
5.7.3.3 Send Period (ID=10105) ... 48
5.7.4 Roaming Network GSM operator code "Vehicle MOVING" parameters ... 48
5.7.4.1 Min Period (ID=10150) ... 48
5.7.4.2 Min Distance (ID=10151) ... 49
5.7.4.3 Min Angle (ID=10152) ... 49
5.7.4.4 Min Speed (ID=10153) ... 49
5.7.5 Unknown Network GSM operator code "Vehicle on STOP" parameters ... 49
5.7.5.1 Min Period (ID=10200) ... 49
5.7.5.2 Min Saved Records (ID=10204) ... 49
5.7.5.3 Send Period (ID=10205) ... 50
5.7.6 Unknown Network GSM operator code "Vehicle MOVING" parameters ... 50
5.7.6.1 Min Period (ID=10250) ... 50
5.7.6.2 Min Distance (ID=10251) ... 50
5.7.6.3 Min Angle (ID=10252) ... 50
5.7.6.4 Min Speed (ID=10253) ... 50

5.8 FEATURES PARAMETERS 51
5.8.1 Green driving priority (ID=11000) 51
5.8.2 Max Acceleration Force (ID=11004) 51
5.8.3 Max Braking Force (ID=11005) 51
5.8.4 Max Cornering (ID=11006) 51
5.8.5 Green driving digital output control settings (ID=11003) 51
5.8.6 Green driving Digital output on duration (ID=11001) 51
5.8.7 Green driving Digital output off duration (ID=11002) 52
5.8.8 Overspeeding priority (ID=11100) 52
5.8.9 Max allowed Speed (ID=11104) 52
5.8.10 Overspeeding output control (ID=11103) 52
5.8.11 Overspeeding Digital output on duration (ID=11101) 52
5.8.12 Overspeeding Digital output off duration (ID=11102) 52
5.8.13 Excessive idling priority (ID=11200) 53
5.8.14 Eventual records (ID=11203) 53
5.8.15 Excessive idling time to stopped (ID=11205) 53
5.8.16 Excessive idling time to moving (ID=11206) 53
5.8.17 Excessive idling output control (ID=11204) 53
5.8.18 Excessive idling output on duration (ID=11201) 53
5.8.19 Excessive idling output off duration (ID=11202) 54
5.8.20 Trip priority priority (ID=11800) 54
5.8.21 Start Speed (ID=11803) 54
5.8.22 Ignition Off Timeout (ID=11804) 54
5.8.23 Trip mode (ID=11802) 54
5.8.24 AutoGeofencing 55
5.8.24.1 AutoGeofencing priority (ID=20000) 55
5.8.24.2 Activation Timeout (ID=20003) 55
5.8.24.3 Deactivate by (ID=20005) 55
5.8.24.4 AutoGeofence event generating (ID=20001) 55
5.8.24.5 Radius (ID=20004) 55
5.9 I/O PARAMETERS 56
5.9.1 I/O#1 property parameter Ignition (ID=50000) 56
5.9.2 I/O#1 priority (ID=50001) 56
5.9.3 I/O#1 High level (ID=50002) 57
5.9.4 I/O#1 Low level (ID=50003) 57
5.9.5 I/O#1 logic operand (ID=50004) 58
5.9.6 I/O#1 averaging length (ID=50005) 59

6 MOUNTING RECOMMENDATIONS 60

6.1 CONNECTING WIRES 60
6.2 CONNECTING POWER SOURCE 60
6.3 CONNECTING IGNITION WIRE 61
6.4 CONNECTING GROUND WIRE 61

7 FMB920 INSTALLATION INSTRUCTION 61

8 CHANGE LOG 63

1 INTRODUCTION

1.1 Attention

Do not disassemble the device. If the device is damaged, the power supply cables are not isolated or the isolation is damaged, before unplugging the power supply, do not touch the device.

All wireless data transferring devices produce interference that may affect other devices which are placed nearby.

The device must be connected only by qualified personnel.

The device must be firmly fastened in the predefined location.

The programming must be performed using a second class PC (with autonomic power supply).

The device is susceptible to water and humidity.

Any installation and/or handling during a lightning storm are prohibited.

1.2 Instructions of safety

This chapter contains information on how to operate FMB920 safely. By following these requirements and recommendations, you will avoid dangerous situations. You must read these instructions carefully and follow them strictly before operating the device!

The device uses a 10 V...30 V DC power supply. The nominal voltage is 12 V DC. The allowed range of voltage is 10 V...30 V DC.

To avoid mechanical damage, it is advised to transport the FMB920 device in an impact-proof package. Before usage, the device should be placed so that its LED indicators are visible, which show the status of operation the device is in.

When connecting the connection (1x5) cables to the vehicle, the appropriate jumpers of the power supply of the vehicle should be disconnected.

Before dismounting the device from the vehicle, the 1x5 connection must be disconnected.

The device is designed to be mounted in a zone of limited access, which is inaccessible for the operator. All related devices must meet the requirements of standard EN 60950-1.

The device FMB920 is not designed as a navigational device for boats.

1.3 Legal Notice

Copyright © 2016 Teltonika. All rights reserved. Reproduction, transfer, distribution or storage of part or all of the contents in this document in any form without the prior written permission of Teltonika is prohibited.

Other products and company names mentioned here may be trademarks or trade names of their respective owners.

The manufacturer reserves the right to make changes and/or improvements at any time in design, functionality, parameters and electrical characteristics without any prior notice and without incurring obligations.

About document

This document contains information about the architecture, possibilities, mechanical characteristics, and configuration of the FMB920 device.

Acronyms and terms used in document:

PC – Personal Computer;

GPS – Global Positioning System;

GPRS – General Packet Radio Service;

GNSS – Global Navigation Satellite System ;

GSM – Global System for Mobile Communications;

SMS – Short Message Service;

AC/DC – Alternating Current/Direct Current;

I/O – Input/Output;

Record – AVL data stored in FMB920 memory. AVL data contains GNSS and I/O information;

AVL packet - data packet which is being sent to the server during data transmission.

2 BASIC DESCRIPTION

FMB920 is tracking terminal with GNSS and GSM connectivity, which is able to collect device coordinates and transfer them via GSM network to server. This device is perfectly suitable for applications, which need location acquirement of remote objects.

Package contents[1]

The FMB920 device is supplied to the customer in a cardboard box containing all the equipment that is necessary for operation. The package contains:

Already implemented FMB920 device into case;

Top and bottom device cover parts;

Input and output power supply cable with a 1x5 connection pins, which is already installed into device.

[1] Package content depends on Order Code, and can be customized by customer needs.

2.1 Basic characteristics

Basic characteristics

GSM / GPRS / GNSS features:

- Teltonika TM2500 quad band module (GSM 850 / 900 / 1800 / 1900 MHz);
- GPRS class 12;
- SMS (text, data).
- Integrated GNSS receiver
- Up to -162 dBm GNSS receiver sensitivity.

Hardware features:

- Built-in movement sensor;
- Built-in Bluetooth 3.0;
- Internal High Gain GNSS antenna;
- Internal High Gain GSM antenna;
- microSD card reader;
- 170 mAh Li-ion rechargeable 3.7 V battery.

Interface features:

- Power supply: 10 ÷ 30V;
- 1 digital input;
- 1 analog input;
- 1 open collector digital output (connecting external relays, LED, buzzers etc.);
- 2 LEDs indicating device status.

Special features:

- Fast position fix;
- High Quality track even in high density urban canyon;
- Ultra small case;
- Ready for harsh environment;
- Color ribbon non-detachable cable;
- Easy to mount in limited access areas;
- Firmly fasten;
- High gain internal GNSS and GSM antennas;
- 2 LED status indication;
- Real-Time tracking;
- Smart data acquisition based on:
  - Time;
  - Angle;
  - Distance;
  - Ignition or any other I/O event;
- Sending acquired data via GPRS;
- GPRS and SMS I/O events;
- Virtual odometer;
- Jamming detection

- Configurable using Secured SMS Commands;
- Overvoltage protection.

Table 1 FMB920 Supply voltage

Description	Voltage	Duration
Normal operation	10-30V	Unlimited
Protection turns on, device turns off	34V	Unlimited
Maximum voltage	<70V	Unlimited
Maximum voltage impulse	90V	5 milliseconds

2.2 Technical features

Part name	Physical specification	Technical details
Navigation LED	LED	Power supply 10...30 V DC 2 W Max Energy consumption[1]: GPRS: ⎓ 50 mA r.m.s Max., Nominal: ⎓ average 35 mA r.m.s, GPS Sleep: ⎓ average 12 mA, Deep Sleep: ⎓ average 10 mA[2] Battery charge current: ⎓ average 100 mA, Rated current: ⎓ 250 mA, Operation temperature: -25 °C ... +55 °C Storage temperature: -40 °C ... +70 °C Storage relative humidity 5 ... 95 % (no condensation) Internal fuse: 3A, 125V
Modem LED	LED	
Socket	Soldered inner socket	
USB	Micro USB socket	

Table 1. FMB920 specifications

[1] Energy consumption has been tested at 12V voltage with no battery charging.
[2] When in Deep Sleep mode no data storing and sending is activated.

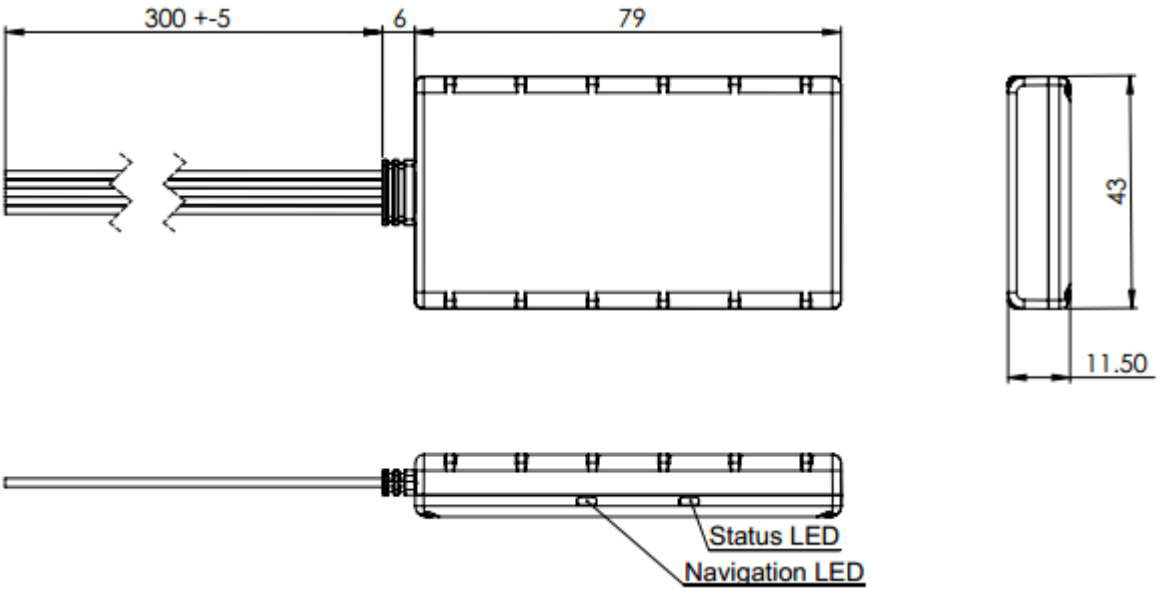

Figure 1 FMB920 view & dimensions (tolerance ±2mm)

2.3 Technical Information about internal battery

Li-Polymer rechargeable battery, 3.7 V, 170 mAh.

FMB920 internal battery is used for detecting external voltage disconnection.

CAUTION: RISK OF EXPLOSION IF BATTERY IS REPLACED BY AN INCORRECT TYPE. DISPOSE OF USED BATTERIES ACCORDING TO THE INSTRUCTIONS.

Battery Disposal instructions:

Battery should not be disposed of with general household waste.
Bring damaged or worn-out batteries to your local recycling center or dispose them to battery recycle bin found in stores.

2.4 Electrical characteristics

VALUE / CHARACTERISTIC DESCRIPTION	Min.	Typ.	Max.	Unit
Supply Voltage:				
Supply Voltage (Recommended Operating Conditions)	10		30	V
Digital Output (Open Drain grade):				
Drain current (Digital Output OFF)			120	µA
Drain current (Digital Output ON, Recommended Operating Conditions)			3,3	mA
Static Drain-Source resistance (Digital Output ON)			300	mΩ
Digital Input:				
Input resistance (DIN1)	47			kΩ
Input Voltage (Recommended Operating Conditions)	0		Supply voltage	V
Input Voltage threshold (DIN1)		2,5		V
Analog Input:				
Input Voltage (Recommended Operating Conditions)	0		30	V
Input resistance		150		kΩ
Measurement error on 12V		0,9		%
Additional error on 12 V		108		mV
Measurement error on 30 V		0,33		%
Additional error on 30 V		88		mV

Absolute Maximum Ratings

VALUE / CHARACTERISTIC DESCRIPTION	Min.	Typ.	Max.	Unit
Supply Voltage (Absolute Maximum Ratings)	-32		32	V
Drain-Source clamp threshold voltage (Absolute Maximum Ratings), (I_{drain} = 2mA)			36	V
Digital Input Voltage (Absolute Maximum Ratings)	-32		32	V
Analog Input Voltage (Absolute Maximum Ratings)	-32		32	V

3 CONNECTION, PINOUT, ACCESSORIES

3.1 How to insert SIM card into FMB920 device:

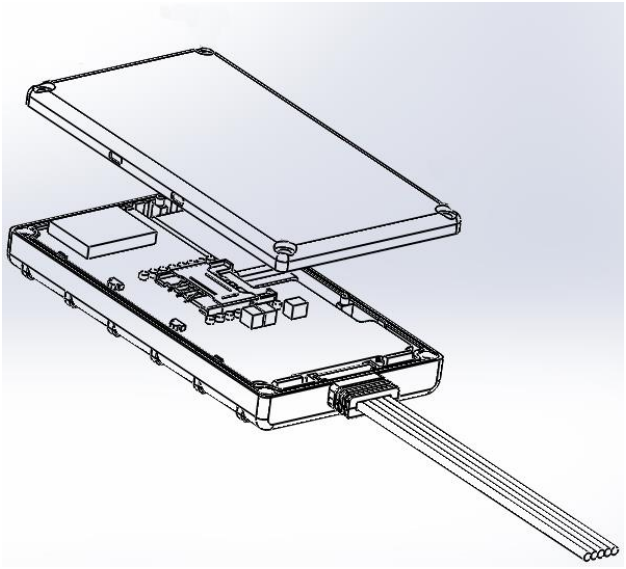

①

Remove FMB920 cover

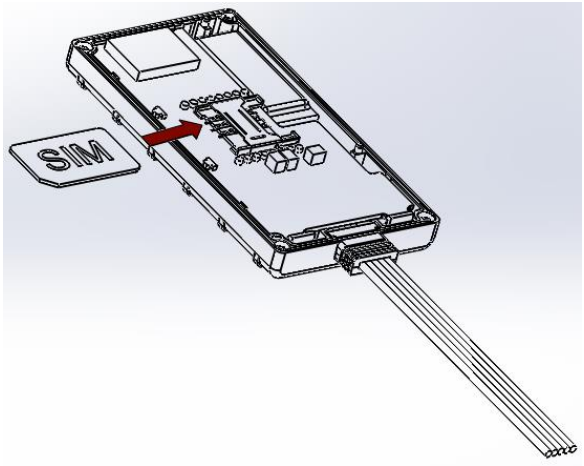

②

Insert SIM card as shown

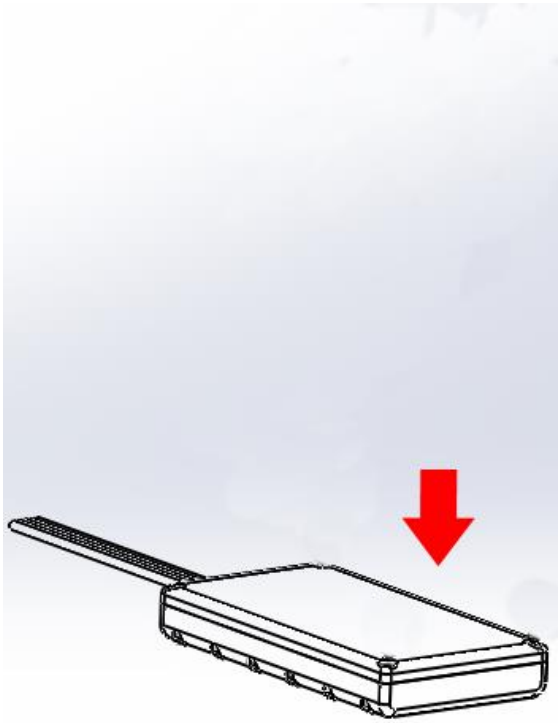

③

Attach cover

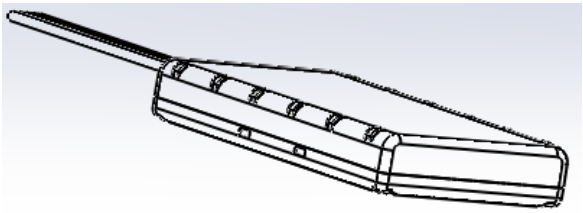

④ Device is ready

3.2 Installing FMB920 drivers

Software requirements:

• Operating system 32-bit and 64-bit: Windows XP with SP3 or later, Windows Vista, Windows 7.

• MS .NET Framework V3.5 or later (http://www.microsoft.com or http://avl1.teltonika.lt/downloads/tavl/Framework/dotnetfx35setupSP1.zip).

Drivers:

Please download MediaTek inbox COM Port drivers from Teltonika website: http://avl1.teltonika.lt/downloads/FMB9XY/MS_USB_ComPort_Driver_exe_v1.1032.3.zip

Installing drivers:

Extract and run FP_INBOX_InstallDriver_v1.1032.3.exe. This driver is used to detect FMB920 device connected to the computer. Click 'Next' in driver installation window (figures below):

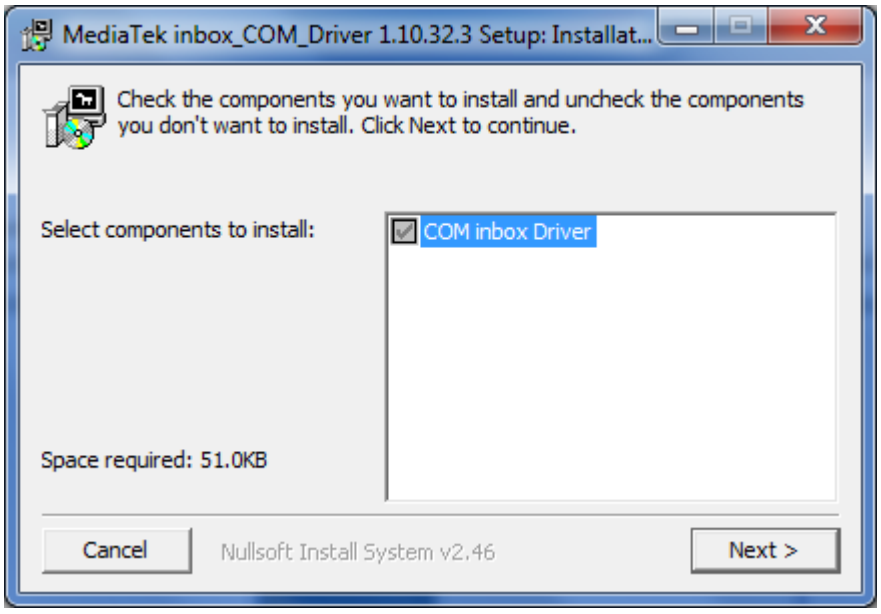

Figure 2 Driver installation window

This will launch device driver installation wizard. In the following window click 'Install' button:

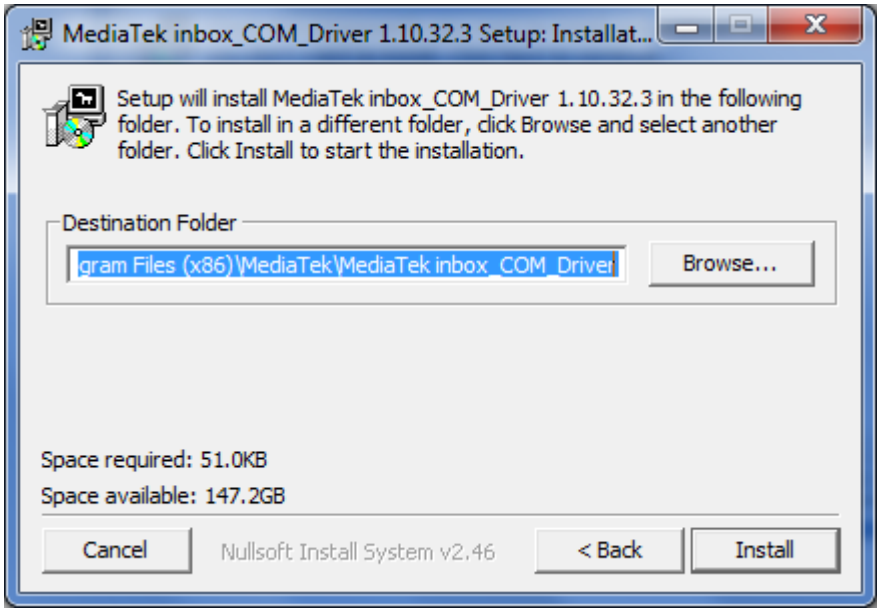

Figure 3 Driver installation window

Setup will continue installing drivers and will display a window about successful process at the end. Click 'Finish' to complete setup:

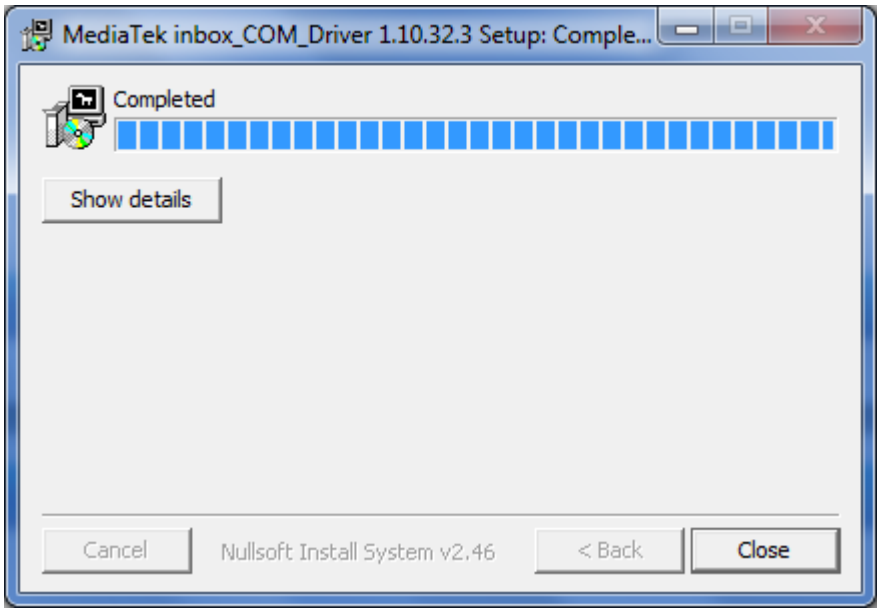

Figure 4 Driver installation window

You have now installed drivers for FMB920 device successfully.

Table 2 FMB920 pinout description

Pin Nr.	Pin Name	Description
1	VCC (10÷30)V DC (+)	Power supply for module. Power supply range (10...30) V DC (+)
2	GND(VCC(10÷30)V DC)(-)	Ground pin. (10÷30)V DC (—)
3	DIN 1	Digital input, channel 1. DEDICATED FOR IGNITION INPUT
4	AIN 1	Analog input, channel 1. Input range: 0-30V DC
5	OUT 1	Digital output, channel 1. Open collector output. Max. ⎓ 3,3 A.

3.3 Accessories

Note: Teltonika does not provide any additional equipment like panic buttons, door sensors or others.

Alarm buttons, door sensors, etc.

Alarm buttons, door sensors, ignition, etc. return two states: high or low voltage. Digital inputs are used to read this information. Figure below shows how to connect alarm button, door sensor, etc.

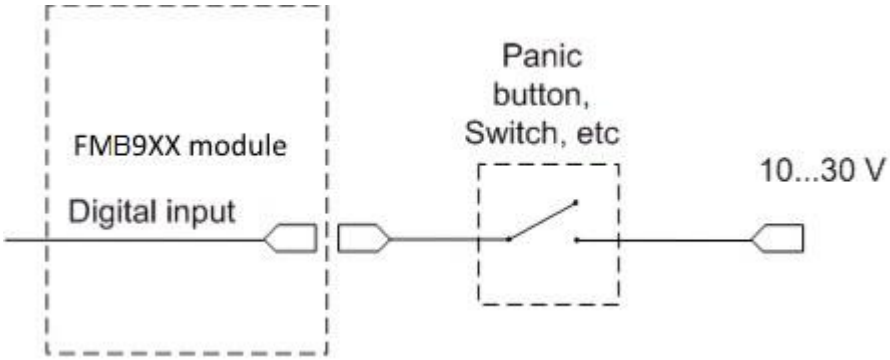

Figure 2 Panic button connection

In cases when sensor output signal is negative, an additional relay has to be installed to convert negative signal to positive.

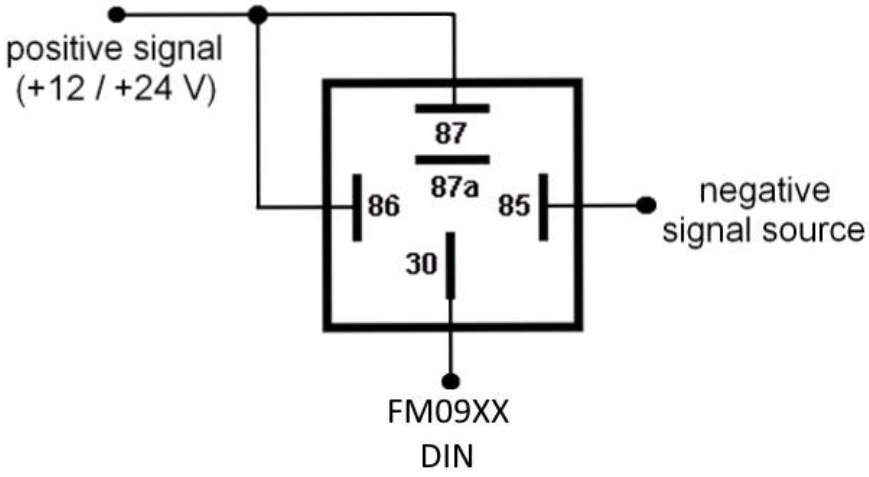

Figure 35 Inverting relay connection

Immobilizer relay

When connected as shown below, FMB920 disables engine starter when output is ON. More details about relays can be found below.

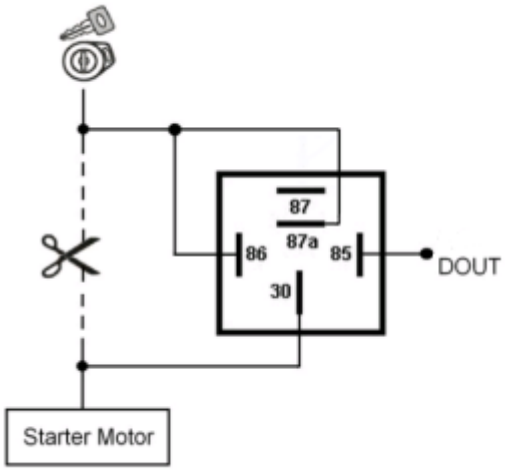

Figure 4 Immobilizer relay connection

Relays

An ordinary automotive relay is used to invert input signal or to immobilize engine starter. Note, that they are available as 12 V or 24 V.

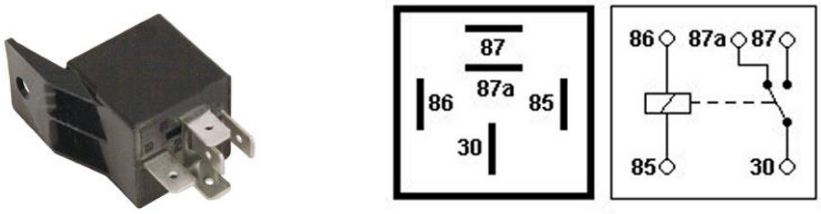

Figure 5 Automotive relay pinout

4 OPERATIONAL BASICS

4.1 Operational principals

FMB920 module is designed to acquire records and send them to the server. Records contain GNSS data and I/O information. Module uses GNSS receiver to acquire GNSS data and is powered with three data acquiring methods: time-based, distance-based and angle-based. Note, that if FMB920 loses connection to GNSS satellites, it continues to make records, however coordinate in these records remains the same (last known coordinate). All data is stored in flash memory and later can be sent via GPRS.

GPRS and SMS settings are described in later sections. FMB920 communicates with server using special data protocol.

FMB920 can be managed by SMS commands. SMS Command list is described in SMS COMMAND LIST section. Module configuration can be performed only via SMS.

4.2 Sleep mode

FMB920 is able to go to sleep mode if such mode is enabled.

This timeout (defined period) starts counting when device is in STOP mode. After timeout is reached and all conditions for sleep mode are met, device goes to sleep mode. While in sleep mode, FMB920 turns GPS module off and it is still making new periodic records. As a result power usage decreases, in turn saving vehicle battery.

FMB920 can enter sleep mode if **ALL** of these conditions are met:

- FMB920 has to be configured to work in Sleep mode and start sleep timeout is reached;
- Device must have synchronized time with GNSS satellites;
- No movement by movement sensor is detected;
- Ignition (configured Ignition Source) is off.

FMB920 exits sleep mode when if **ONE** of following conditions are true:

- Movement by movement sensor is detected;
- Ignition (configured Ignition Source) is turned on.

4.3 Virtual odometer

Virtual odometer is used to calculate traveled distance in FMB920 as a separate I/O element. When FMB920 detects movement, it starts counting distance using GNSS signal: every second it checks current location and calculates distance between current and previous point. It keeps adding these intervals until it is time to make a record, then FMB920 records its location and adds odometer value, which is equal to the sum of all distances, measured every second. User can choose Odometer mode: 0 – Normal mode, or 1 – Continuous.

At Normal mode, when record is made, odometer resets to zero and distance calculation starts all over again.

Continuous odometer mode requires ignition (configured Ignition source) to be turned on. Odometer counts all distance calculations from records and sums them to one distance. Continuous odometer stops counting, when vehicle is at stop and ignition is turned off.

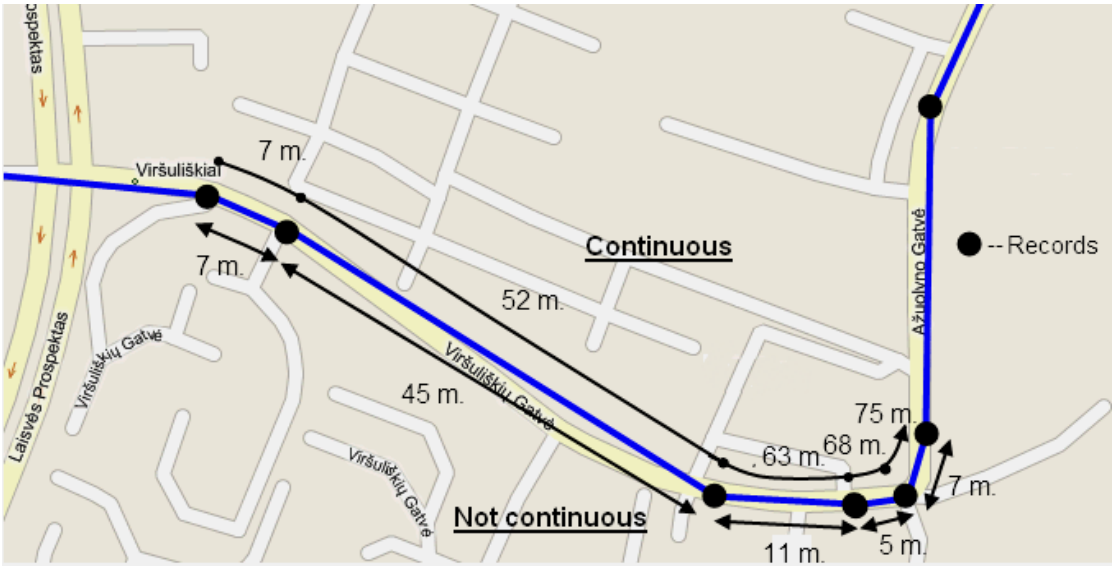

Figure 6 Odometer continuous and Not continuous distance counting parameter example

4.4 Features

Using available features can greatly increase FMB920 usability options.

4.4.1 Green Driving Scenario.

Helps to prevent and inspect driver about harsh driving. Scenario continuously monitors: accelerating force, braking force and cornering angles. Warns driver if needed. DOUT1 is controlled by scenario for user needs, for example buzzer or LED. DOUT indication can be controlled via SMS or configurator.

To save GPRS traffic Green Driving **event** will be **generated (included into sent records) only** when FMB920 measured values are higher than those set in configuration, without additional I/O settings.

To prevent generating false events, harsh acceleration and harsh braking is monitored only when following conditions are fulfilled:

- Ignition is ON (DIN1 = 1)
- Vehicle speed is equal or higher than 10km/h

Harsh cornering is monitored only when following conditions are fulfilled:

- Ignition is ON (DIN1 = 1)
- Vehicle speed is equal or higher than 30km/h

Note: Green Driving Scenario is a factor on various cars and various drivers testing phase and can be subject to changes. Teltonika is constantly working on improvement of the functionality of the devices, and strongly recommends using the latest version of the firmware.

4.4.2 Over Speeding Scenario.

Helps to prevent from exceeding fixed speed and inspects driver if needed. DOUT1 is controlled by scenario for user needs, to manage buzzer, LED, etc.

4.4.3 Jamming detection

Jamming detection shows when GSM signal jamming occurs. DOUT1 is controlled by scenario for user needs, to manage buzzer, LED, etc.

4.4.4 Trip

Trip customizable feature enables user extended monitoring of performed trips (from engine start at present location to engine stop at arrived location), log their start and stop points, view driven total distance[3]. Event will be **generated (included into send records) only** when trip starts and finishes.

Note: Scenarios and Trip features are activated (DOUTs are activated) only if DIN1=1 (ignition is on).

[3] Continuous odometer – total driven distance, works only in TRIP mode. Continues distance is counted only for ONE trip. If trip is finnished (stop point is detected), odometer resets to 0 (zero). Next trip will start counting from the begining.

4.4.5 Crash Detection

If Crash detection is enabled (ID:11400), it monitors acceleration on each axis, if acceleration exceeds configured value (ID:11402) for longer then configured duration (ID:11401), event with ID:247 and value: 1 is generated.

Configuration parameters

ID	Name	Possible values	Comments
11400	Crash Detection Enable	[0/1]	
11401	Duration msec	0 – 2000	ms
11402	Treshold mg	0 - 7900	mG
11406	Crash Detection Trace Enable	[0/1]	

Crash Trace operation

If trace is enabled (ID:11460) FMB will collect acceleration data every 40 msec, buffer is big enough to hold data for 5 seconds. and on Crash Event detection, records will be generated from this buffer, following these conditions:

- Every second
- Acceleration changed more then > 50mG

Data will be collected and records generated 5 seconds after then event using the same conditions.

Every records generated will be with ID:245 value:2, and will have accelerometer X Y Z values included. Eatch record will have acutrate timestamps in milisconds.

Usually between 20 to 30 records is generated on crash event detection.

CONFIGURATION

4.4.5 Configurator

New FMB920 module has default factory settings. Settings should be changed according to your application and your GSM operator information.

FMB920 configuration is performed via SMS commands and configurator.

FMB920 has one user editable profile.

It can be configured to acquire and send data to server. If device is not able to send data to server, GSM is not available FMB920 will start storing records to flash memory. It is possible to store up to 122880 data records with 64mb SD memory card. It will send data later when GPRS is available again. Note that FMB920 can have memory full of records. In such case it will start deleting oldest records in order to save new ones. Sending all data records to server may take some time.

New FMB920 module has default factory settings. Settings should be changed according to your application and your GSM operator information.

FMB920 configuration is performed via FMB920 Configurator program. Contact sales manager to get the latest FMB920 Configurator version. FMB920 configurator operates on Microsoft Windows OS and uses MS .Net Framework 3.5 or higher. Please ensure that MS .Net Framework 3.5 or later is installed on your PC before starting configurator. Latest MS .Net Framework version can be downloaded from official Microsoft web page.

Module configuration is performed over USB cable. Configuration process starts from starting FMB920 Configurator program and then connecting to FMB920 device via Connect button located in Online menu part. FMB920 has one user editable profile, which can be loaded from device, and saved. User can also revert to default settings, by pressing Reset to defaults button. After any modification of configuration settings it has to be saved to FMB920 device, otherwise it will not be written to device.

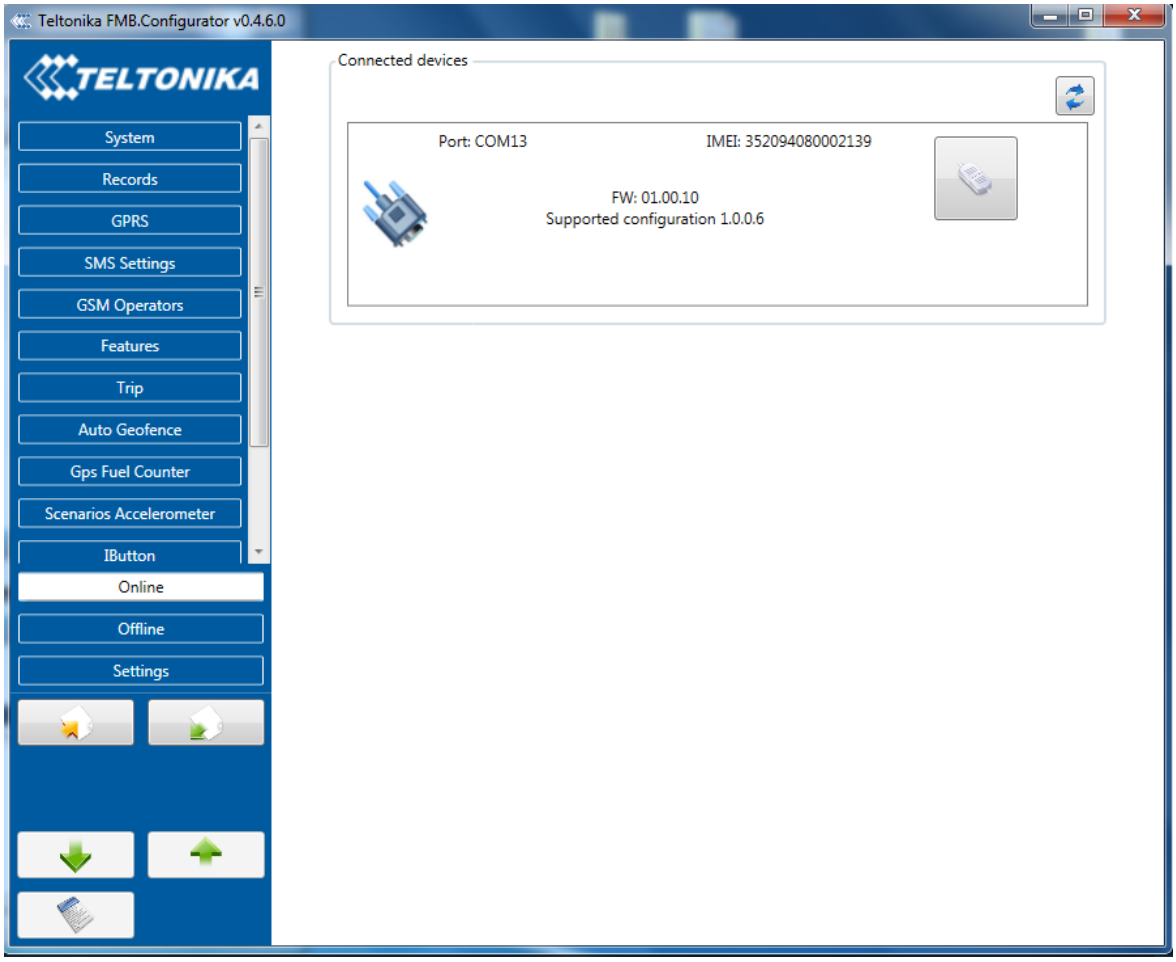

Main Buttons description:
'Scan' – scans for available devices.
'Connect to device' – connects device.
'Store configuration to file' – saves configuration.
'Read configuration from file' – loads saved configuration.
'Read configuration' – loads configuration from device.
'Store configuration' – saves configuration to device.

System settings

System settings 9 configurable parameters:

- Sleep settings, where user can choose sleep mode;
- Ignition source, where user can choose between power voltage, digital input 1 and accelerometer ignition sources
- Object Motion Detection Settings, where user can configure 3 ways how FMB920 will detect stopped movement, and change its working mode (for working modes, read section 0);
- Static navigation settings, where user can turn static navigation on or off;
- Records Settings, where user can enable or disable records when GPS is not available (no time synchronization);
- GNSS source Settings, where user can choose satellite system.
- LED indication, where user can turn on or off indication leds.

Movement Source	Vehicle on Stop mode	Vehicle Moving mode
Ignition (recommended)	If ignition (DIN1) is logic low	If ignition (DIN1) is logic high
Movement (movement sensor)	Internal movement sensor does not detect movement	Internal movement sensor detects movement
GPS	GPS fix is available and vehicle speed is lower than 5 km/h	GPS fix is available and vehicle speed is higher than 5 km/h
	While GPS fix is unavailable, Object Motion Detection Settings are working like in Msensor mode	

Static Navigation Mode is a filter, which filters out track jumps when the object is stationary. If Static navigation filter is disabled, it will apply no changes on GPS data. If Static navigation filter is enabled, it will filter changes in GPS position if no movement is detected (depends on Object Motion Detection Settings). It allows filtering GPS jumps when object is parked (is not moving) and GPS position is still traced.

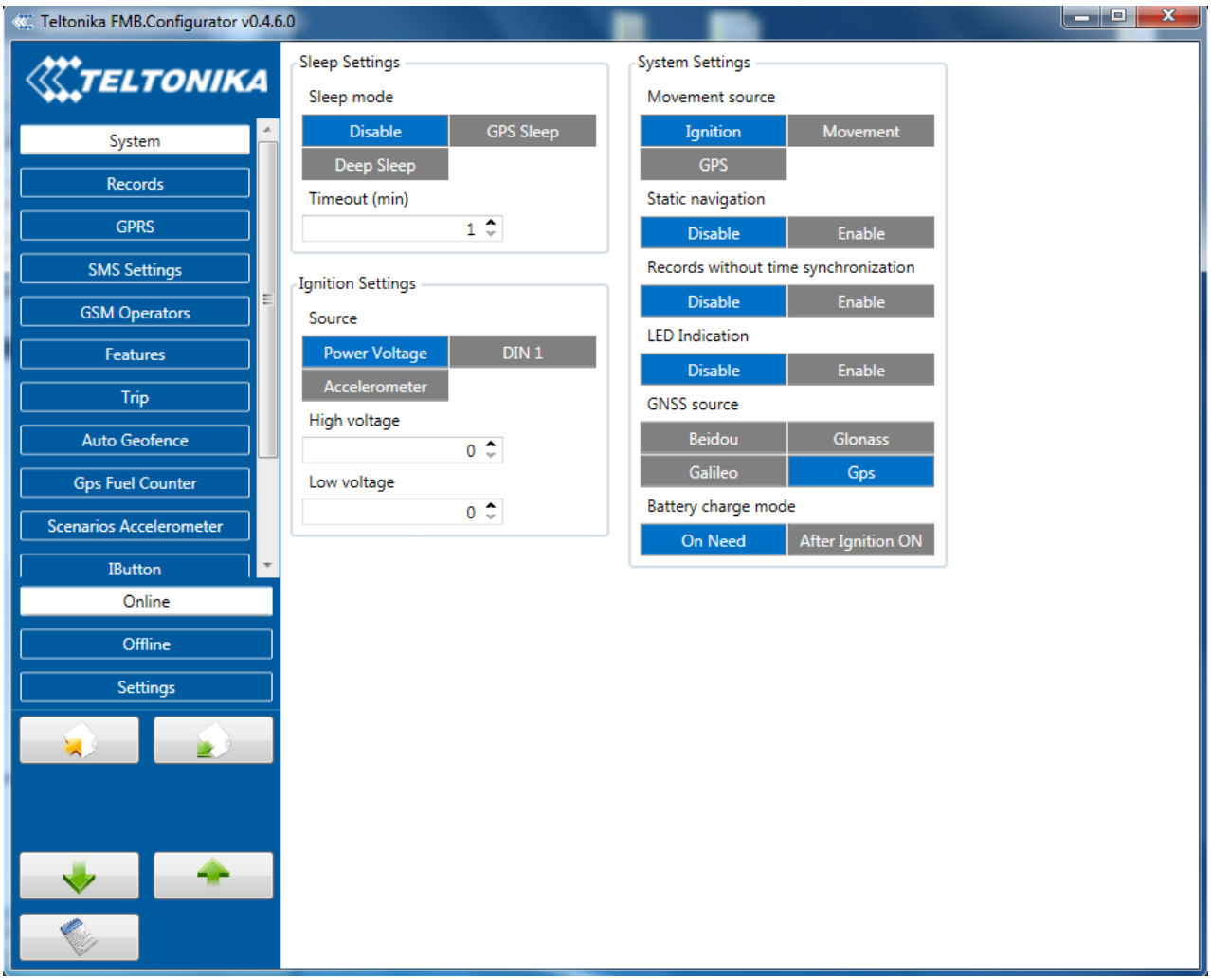

Figure 6 System settings configuration

In GNSS source Settings user can configure which GNSS system or systems to use.

User has choice to use only one system of Gps, Glonass, Galileo or Beidou. Also it is able to chose two or three systems together. One exception is that you can not combine Beidou and Glonass systems together.

List of configurable GNSS sources:

Beidou only	ID:01
Glonass only	ID:02
Galileo only	ID:04
Galileo+Beidou	ID:05
Galileo+Glonass	ID:06
Gps only	ID:08
Gps+Beidou	ID:09
Gos+Glonass	ID:10
Gps+Galileo	ID:12
Gps+Galileo+Beidou	ID:13
Gps+Galileo+Glonass	ID:14

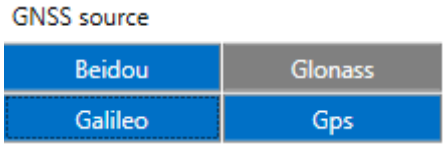

Example of good configuration

List of **NON**–configurable GNSS sources:
Glonass+Beidou
Galileo+Glonass+Beidou
Gos+Glonass+Beidou
GPS+Galileo+Glonass+Beidou

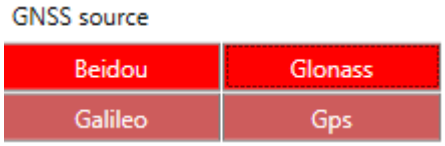

Example of bad configuration

Records settings

Here user can modify if FMB920 device will send newest records first, meaning, that the most important thing is to know recent position of car, older records are being sent right after newest records arrive to AVL application.

Activate Data Link Timeout is used to set timeout of link between FMB920 and AVL application termination. If FMB920 has already sent all records it waits for new records before closing link. If new records are generated in the period of this timeout, and minimum count to send is reached, they are sent to AVL application. This option is useful when GSM operator charge for link activation.

Server Response Timeout is used to set time period waiting for response from server side.

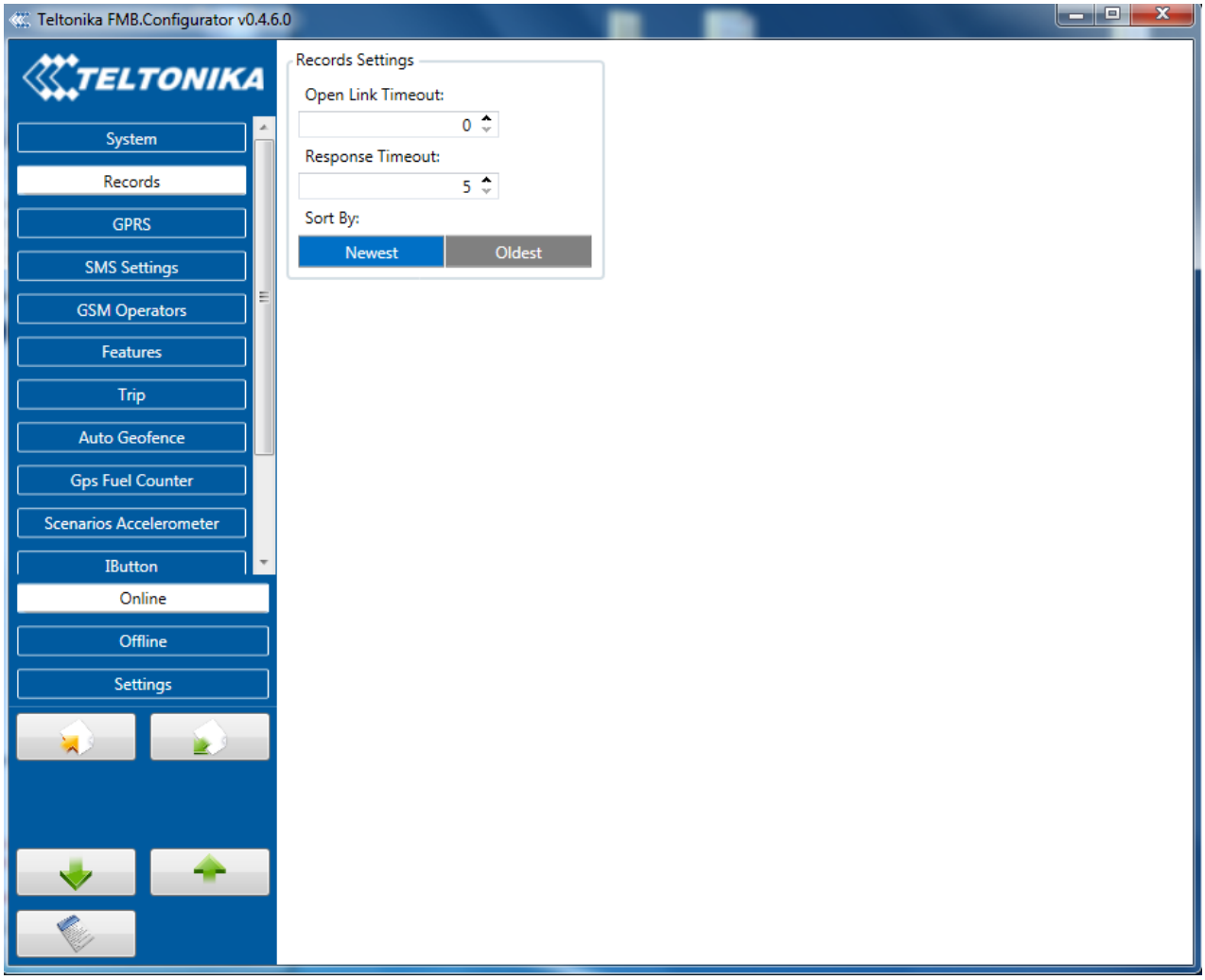

Figure 7 Records settings configuration

GSM settings, GPRS part

'GPRS' defines main parameters for FMB920: GSM operator APN and GPRS username and password (optional – depending on operator), destination server IP and port, and allows to set protocol used for data transfers – TCP or UDP.

Some operators use specific authentication for GPRS session – CHAP or PAP. If any of these is used, APN should be entered as '`chap:<APN>`' or '`pap:<APN>`'. I.e. if operator is using APN 'internet' with CHAP authentication, it should be entered as '`chap:internet`'. Information about APN and authentication type should be provided by your GSM operator.

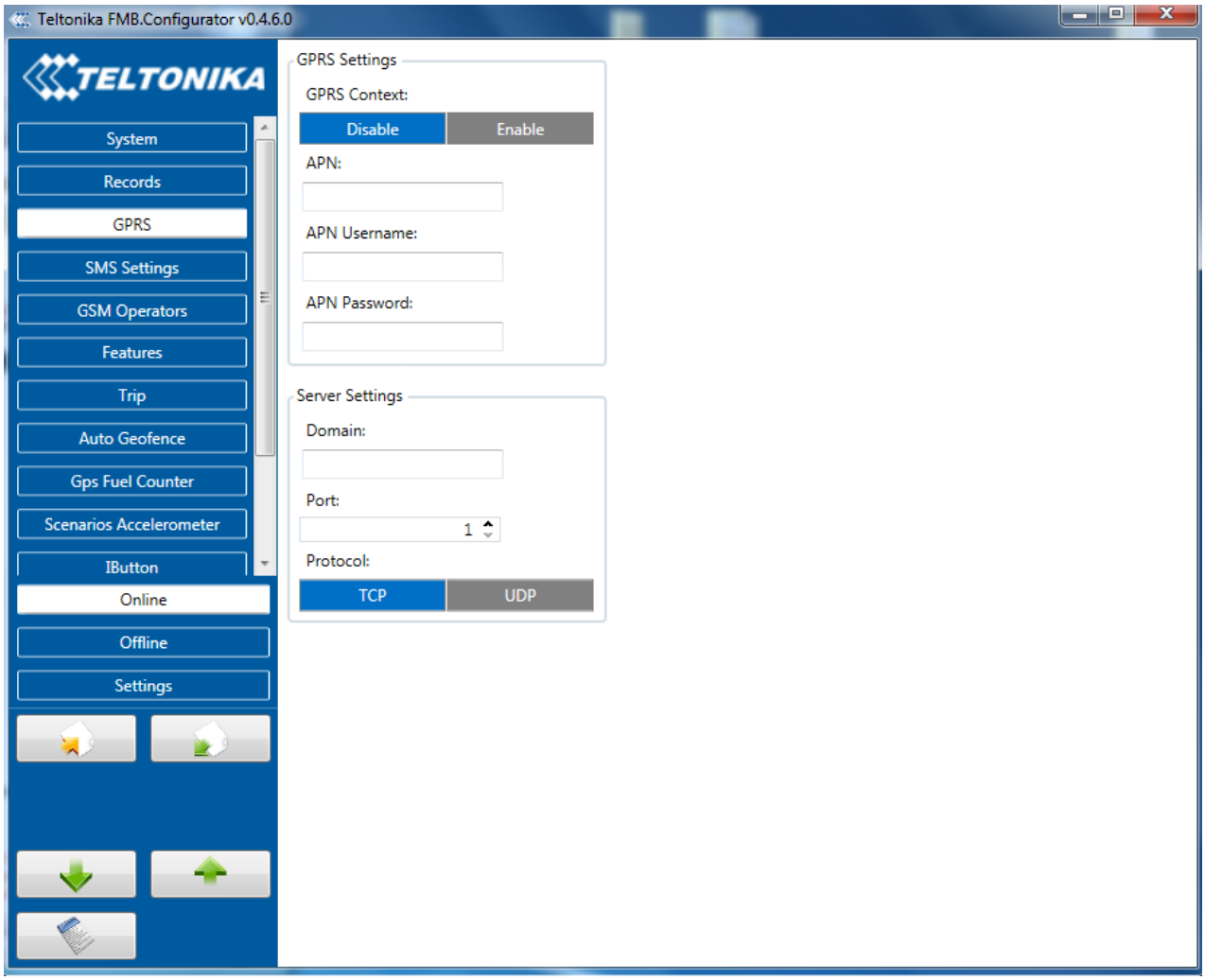

Figure 8 GPRS configuration

GSM settings, SMS part

Essential fields in 'SMS' part are 'Login' and 'Password'. The login and password are used with every SMS sent to FMB920. If login and password are not set, in every SMS sent to FMB920 device two spaces before command have to be used (<space><space><command>).

Command structure with set login and password:

<login><space><password><space><command>, example: "asd 123 getgps"

Phone numbers have to be written in international standard, without using "+" or "00" signs in prefix. If no numbers are entered, configuration and sending commands over SMS are allowed from all GSM numbers.

SMS data sending settings – enable or disable **periodic** data and event SMS usage. This setting does not affect replies to SMS request messages – answers are always sent back to sender telephone number.

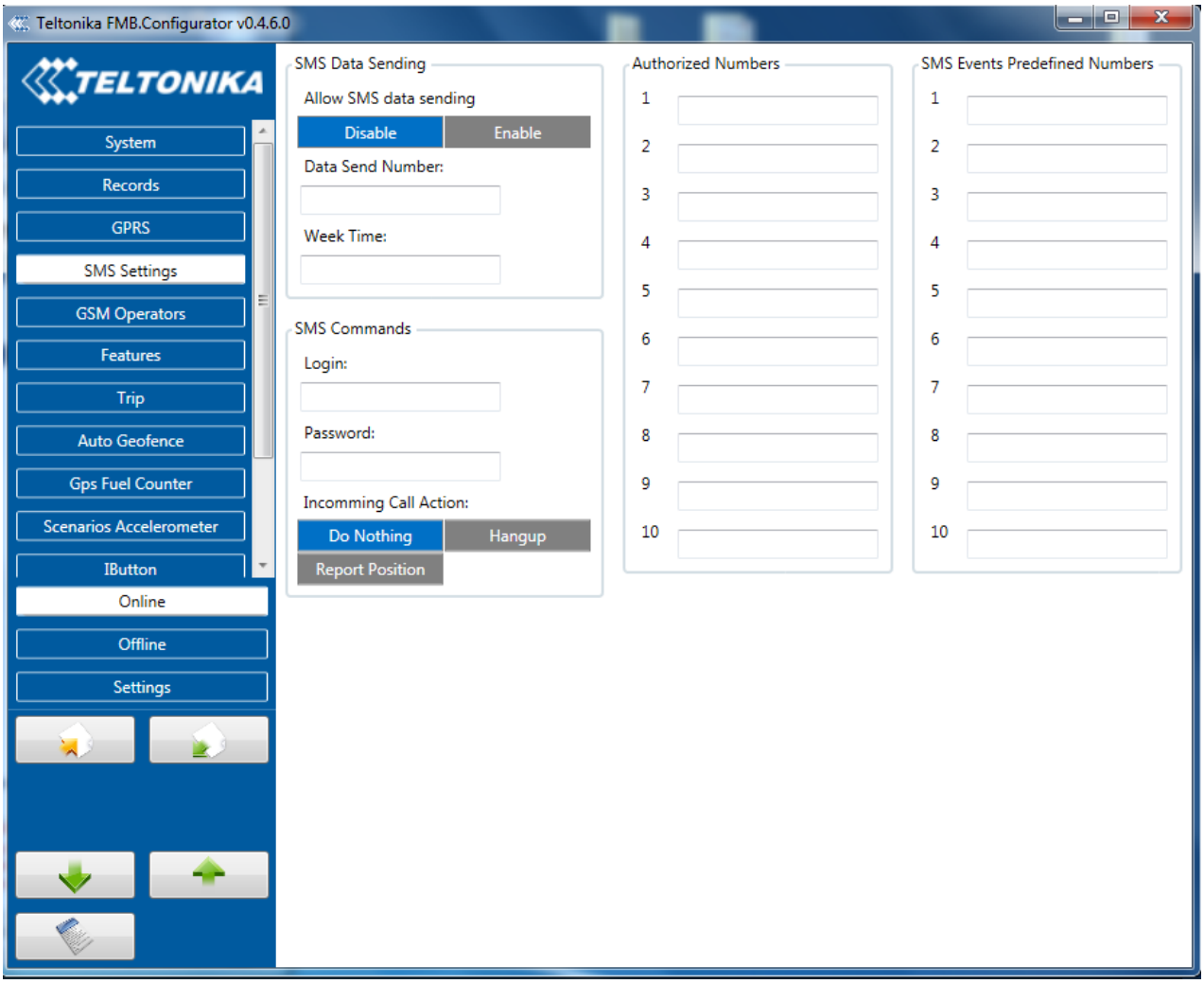

Figure 9 SMS configuration

Note: A mobile phone will not understand and SMS with binary code, so sending it to a mobile phone is useless. When sending a binary SMS to a phone number, which is a server phone number, the server can interpret and understand binary code, so the data can be read and you can view it on the server.

SMS login and password and authorized number list are used to protect FMB920 module from unauthorized access. Module accepts messages only from a list of authorized numbers and with proper module login and password. Numbers must be without "+" or "00" prefix. If no authorized numbers are entered, module accepts messages from all numbers.

GSM settings, Operator list

Operators list – FMB920 can work in different modes (use different settings) according to the operator list defined. Operator list is used for Data Acquisition Mode switching (see chapter 0 Data Acquisition Mode settings for more details). Modes are changed based on GSM operator FMB920 is connected to.

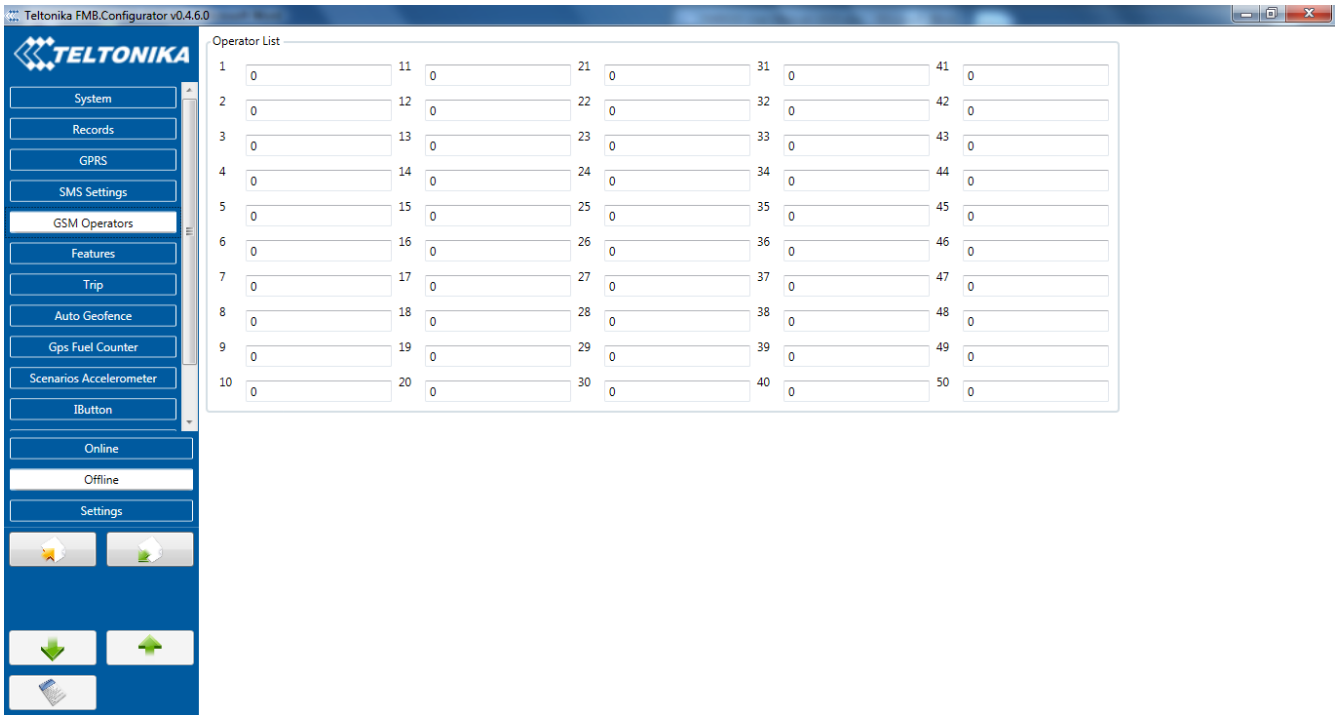

Figure 10 Operator list configuration

If operator list is left empty, it will allow using GPRS to any GSM operator. Please note that FMB920 will work in **Unknown mode only** (make sure it is configured to allow data sending – GPRS context is enabled).

Data Acquisition Mode settings

Data Acquisition Modes are an essential part of FMB920 device, it is also highly configurable.

By configuration user defines how records will be saved and sent. There are three different modes: Home, Roaming and Unknown. All these modes with configured data acquisition and send frequencies depend on current GSM Operator defined in Operator list (see section 0) and are switched when GSM operator changes (e.g. vehicle passes through country boarder).

If current GSM operator is defined as Home Operator, device will work in Home Data Acquisition mode, if current operator is defined as Roaming Operator, device will work in Roaming Data Acquisition mode, and if current operator code is not written in Operator list (but there is at least one operator code in the operator list), device will work in Unknown Acquisition mode.

This functionality allows having different AVL records acquire and send parameters values when object is moving or stands still. Vehicle moving or stop state is defined by Stop Detection Source parameter. There are 3 ways for FMB920 to switch between Vehicle on Stop and Vehicle Moving modes see section 0.

FMB920 allows having 6 different modes. Operational logic is shown in Figure 24.

If there are no operator codes entered into operator list, FMB920 will work in Unknown network mode ONLY.

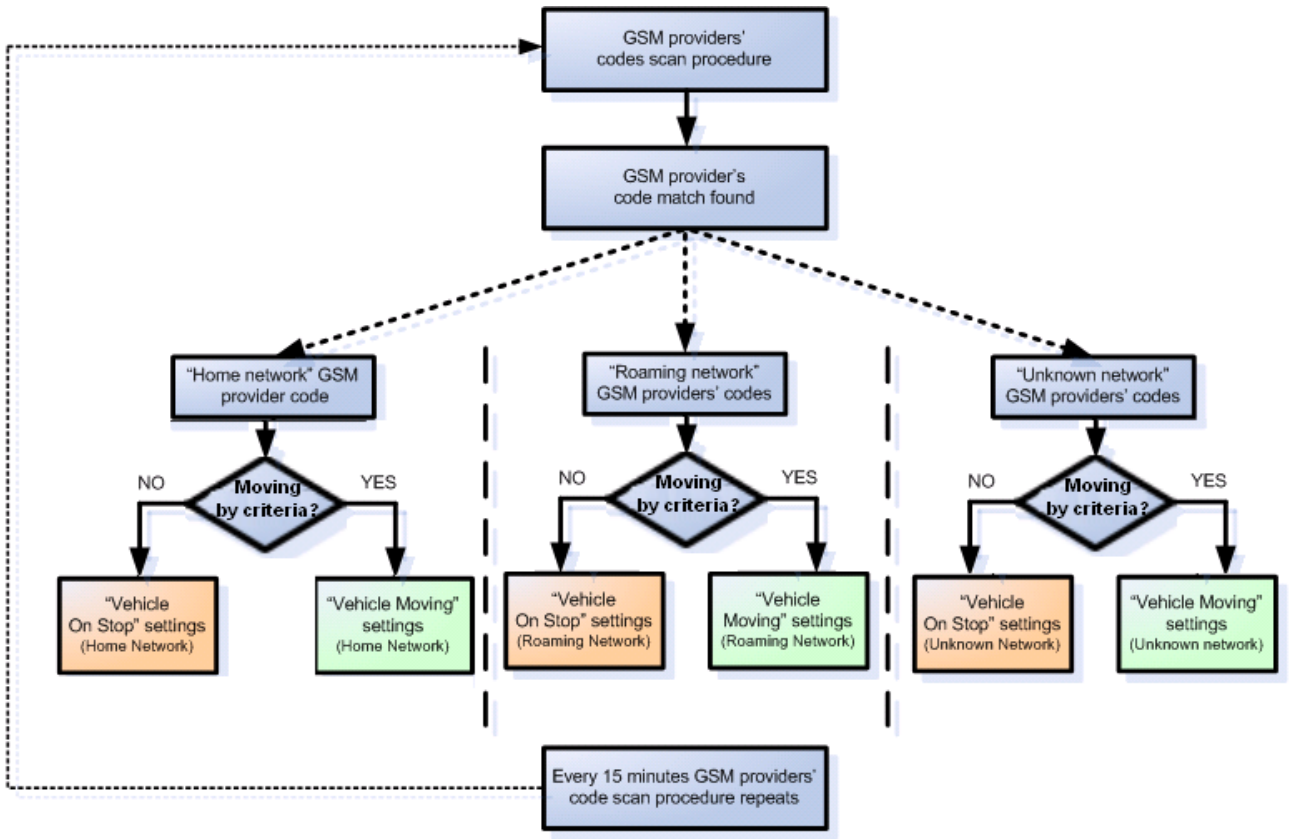

Figure 24 Data Acquisition Mode configuration

Operator search is performed every 15 minutes. Depending on current GSM operator, Home, Roaming or Unknown mode can be changed faster than every 15 minutes. This process is separate from operator search. Movement criteria are checked every second.

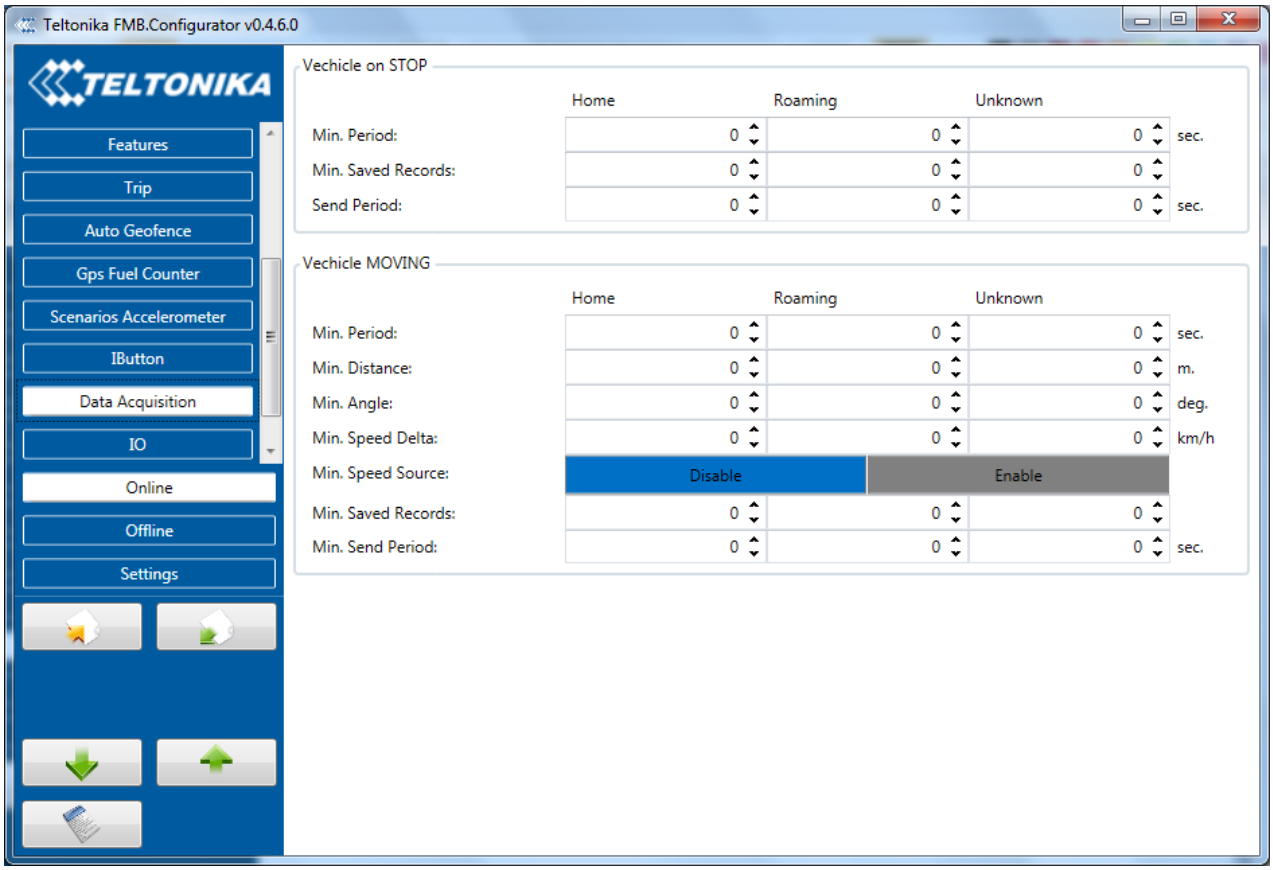

Figure 23 Data Acquisition Mode configuration

'Min Saved Records' defines minimum number of coordinates and I/O data that should be transferred with one connection to server. If FMB920 does not have enough coordinates to send to server, it will check again after time interval defined in 'Sending Period'.

Send period – GPRS data sending to server period. Module makes attempts to send collected data to server every defined period. If it does not have enough records (depends on parameter Min. Saved Records described above), it tries again after defined time interval.

Note: Keep in mind that FMB920 operates in **GMT:0** time zone, without daylight saving.

FMB920 is able to collect records using four methods at the same time: time, distance, angle and speed based data acquisition:

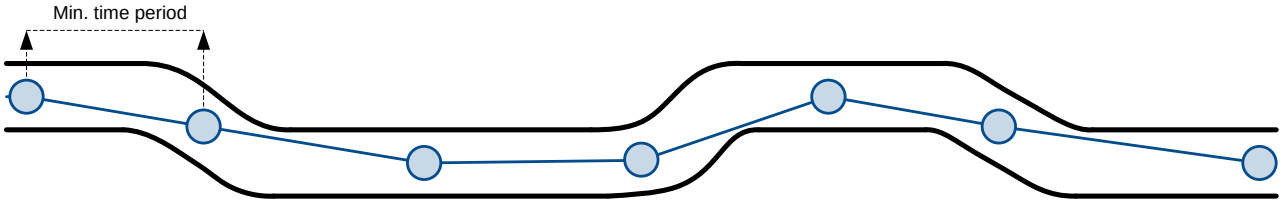

Distance based data acquiring (Min. distance) – records are being acquired when the distance between previous coordinate and current position is greater than defined parameter value. Entering zero disables data acquisition depending on distance.

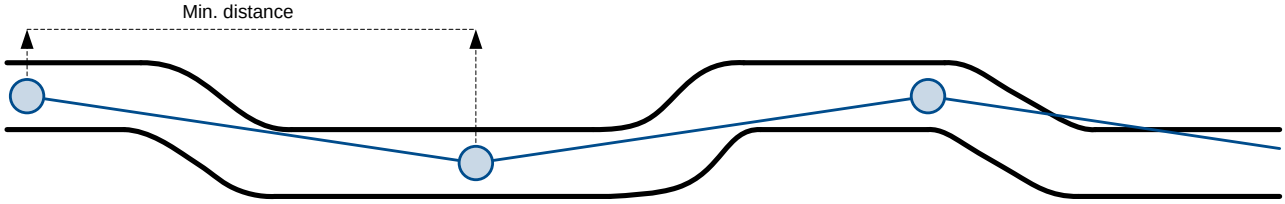

Angle based data acquiring (Min. angle) – records are being acquired when angle difference between last recorded coordinate and current position is greater than defined value. Entering zero disables data acquisition depending on angle.

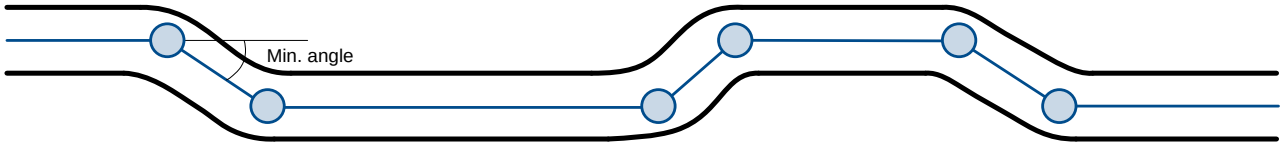

Speed based data acquiring (Min. Speed Delta) – records are being acquired when speed difference between last recorded coordinate and current position is greater than defined value. Entering zero disables data acquisition depending on speed.

Features settings

In Features window five different scenarios are available.

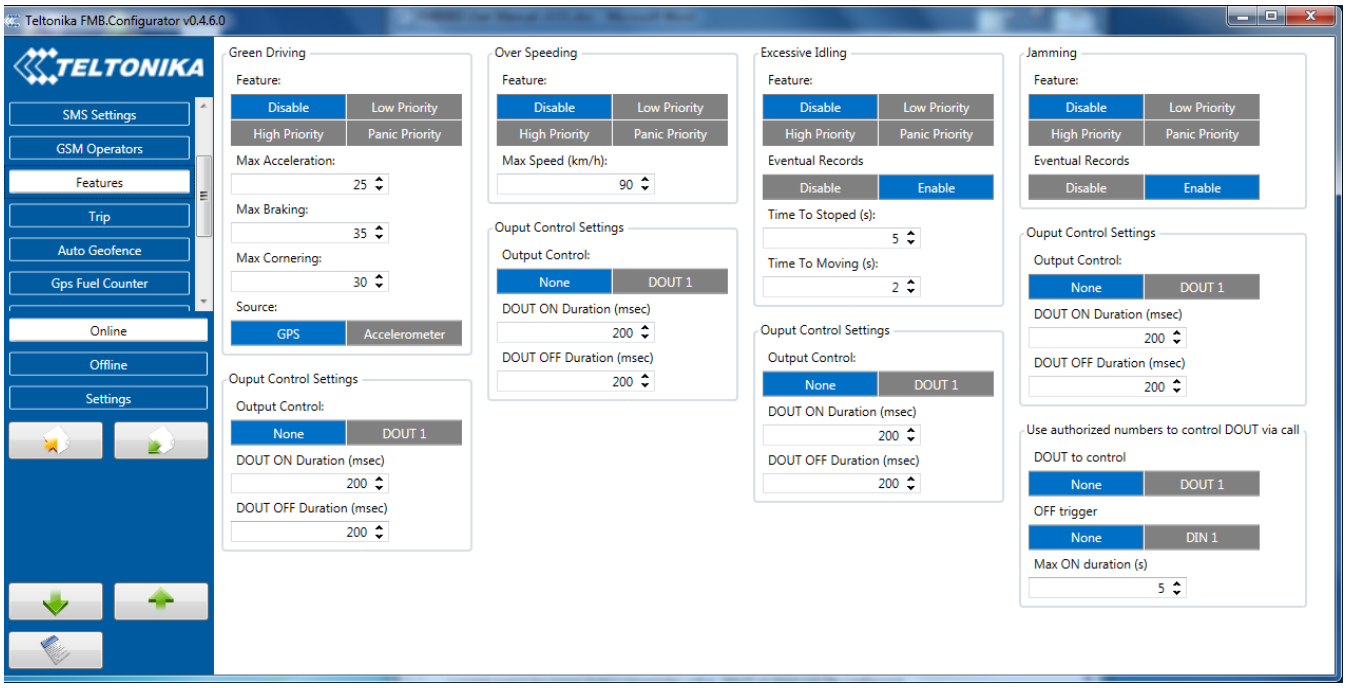

Figure 25 Scenarios configuration

1. Green Driving

Scenario is activated and DOUT1 is ON, when vehicle exceeds on of Max. Acceleration, Max Braking or Max Cornering parameters value. You can configure Max. Acceleration and Max. Braking parameters in mG (miliG) units and Max. Cornering parameter in rad/s units. Scenario is activated until current Acceleration, Braking or Cornering value decreases below parameter value.

2. Over Speeding

Scenario is activated and DOUT1 is ON, when vehicle speed exceeds parameter value. Scenario is activated until current speed decreases below parameter value.

3. Excessive Idling

Scenario is activated and DOUT1 is ON, when vehicle stops for specific amount of time. You can configure time it takes to turn on this scenario (Time to Stopped). Scenario is activated until vehicle starts moving and keeps moving for amount of time that is configured. You can configure time it takes to turn OFF this scenario (Time to Stopped).

4. Jamming

Scenario is activated and DOUT1 IS ON, then jamming is detected.

5. Autorized number call

Scenario is activated and DOUT1 IS ON, then call is received from number who is in authorized numbers list.

In all scenarios Digital Output can be controlled independent from scenario.

DOUT ON Duration parameter shows for how long DOUT is set on after scenario is activated. DOUT OFF Duration parameter shows how much time should pass after DOUT is set off till next event can be generated. These parameters must be configured in ms.

4.4.6 Trip settings

Trip window offers user to configure Trip feature. If Trip is enabled configuration of parameters are enabled.

Start Speed – GPS speed has to be greater than the specified Start Speed in order to detect Trip Start.

Ignition Off Timeout – timeout to wait if ignition was off, to detect Trip stop.

Continuous distance counting – Not or Continuous can be chosen. For this feature I/O Odometer must be enabled.

If I/O Odometer is enabled and Continuous distance counting variable (Mode) is set to Continuous, **Trip distance** is going to be counted continuously (**from Trip start to Trip stop**). This value is written to I/O Odometer value field. When Trip is over and next Trip begins, Odometer value is reset to zero. When the next trip starts counting continuously starts from the beginning again.

If I/O Odometer is enabled and Continuous Distance Counting variable (Mode) is set "Between Records", then the distance is going to be counted only between every record made. This value is written to I/O Odometer value field and reset to zero every new record until Trip stops. If later all Odometer values are summed up manually, the user gets the distance driven during the whole period of the Trip.

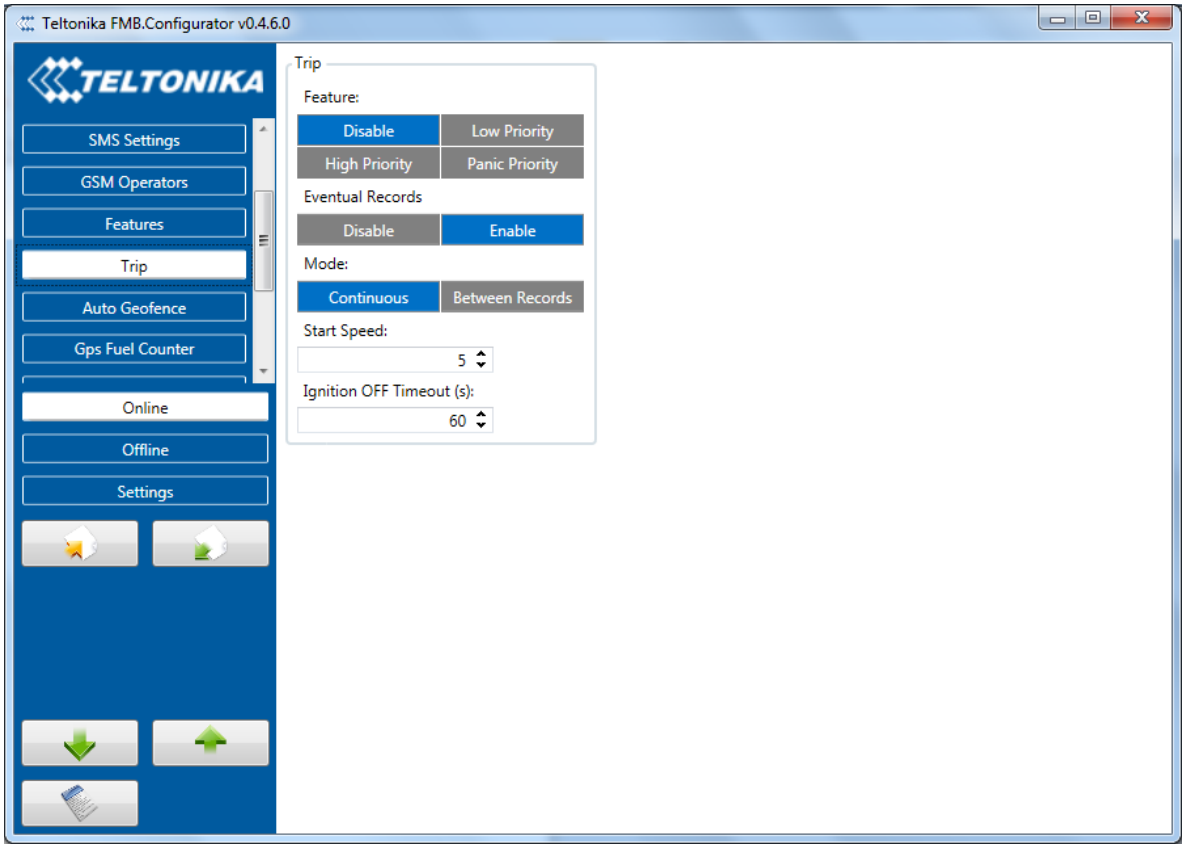

Figure 26 Trip configuration

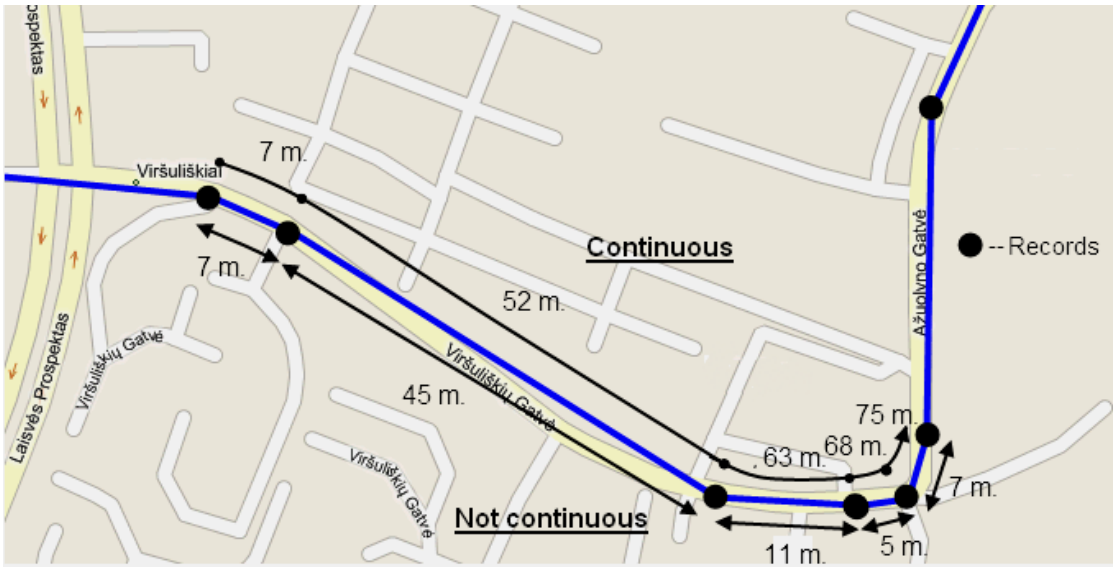

Figure 27 Trip continuous distance counting parameter example

AutoGeofencing settings

AutoGeofence – the last known position after movement = off. If your car's being taken away – you can be notified. The shape and size of the geofence zones are parameters. It is possibility to state whether entering in or out of the geofence triggers an asynchronous message.

AutoGeofencing option can be configured by following parameters visible in figure 28 below.

Activation TMO – Time period before Geofence is activated after vehicle stops.

Deactivate By:

Ignition – If ignition becomes high it will disable AutoGeofenze Zone;

Power Voltage – if power voltage enters entered value it will disable AutoGeofenze Zone.

Digital input 1 – if digital input is triggered it will disable AutoGeofenze Zone.

Feature – Priority of generated event, which will be applied to saved record.

Enter Event – Event generation on Geofence entrance.

Exit Event – Event generation on Geofence exit.

On Both - Event generation on Geofence entrance Or exit

Eventual Records – Enable or Disable Eventual Records functionality.

Note that AutoGeofencing does not require entering coordinates, instead it requires GPS visibility. If vehicle stopped and activation timeout has passed, an AutoGeofence will be created around vehicle's last position with set Radius value.

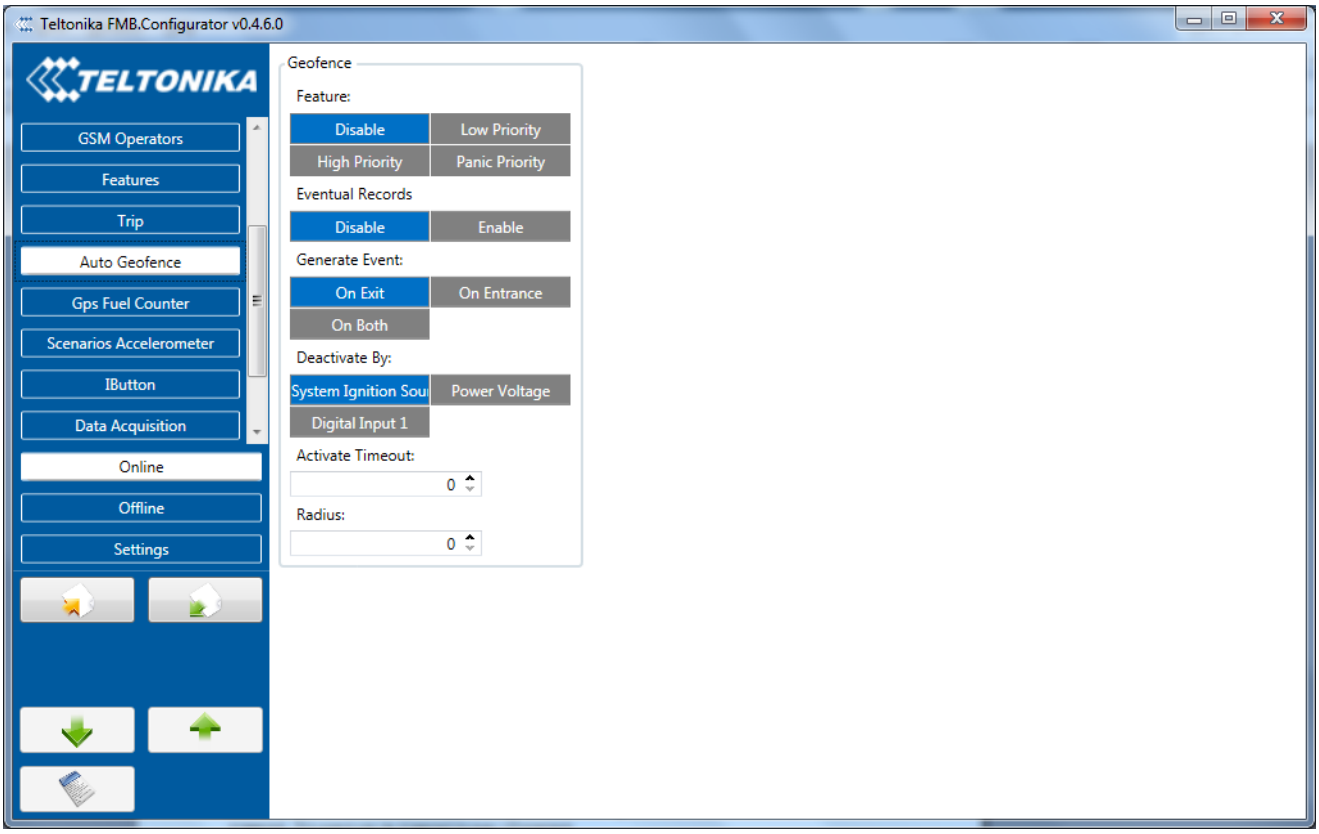

Figure 28 Geofence configuration

4.4.7 SMS events

SMS events functionality allows FMB920 to send a configured SMS when an event is triggered. This event can be triggered by ever I/O element

Then any of the I/O elements is triggered, FMB920 sends a configured SMS message to a defined phone number. If SMS events is activated, but there are no numbers defined in SMS events PreDefined Numbers list (figure 29), then the device will not send any messages.

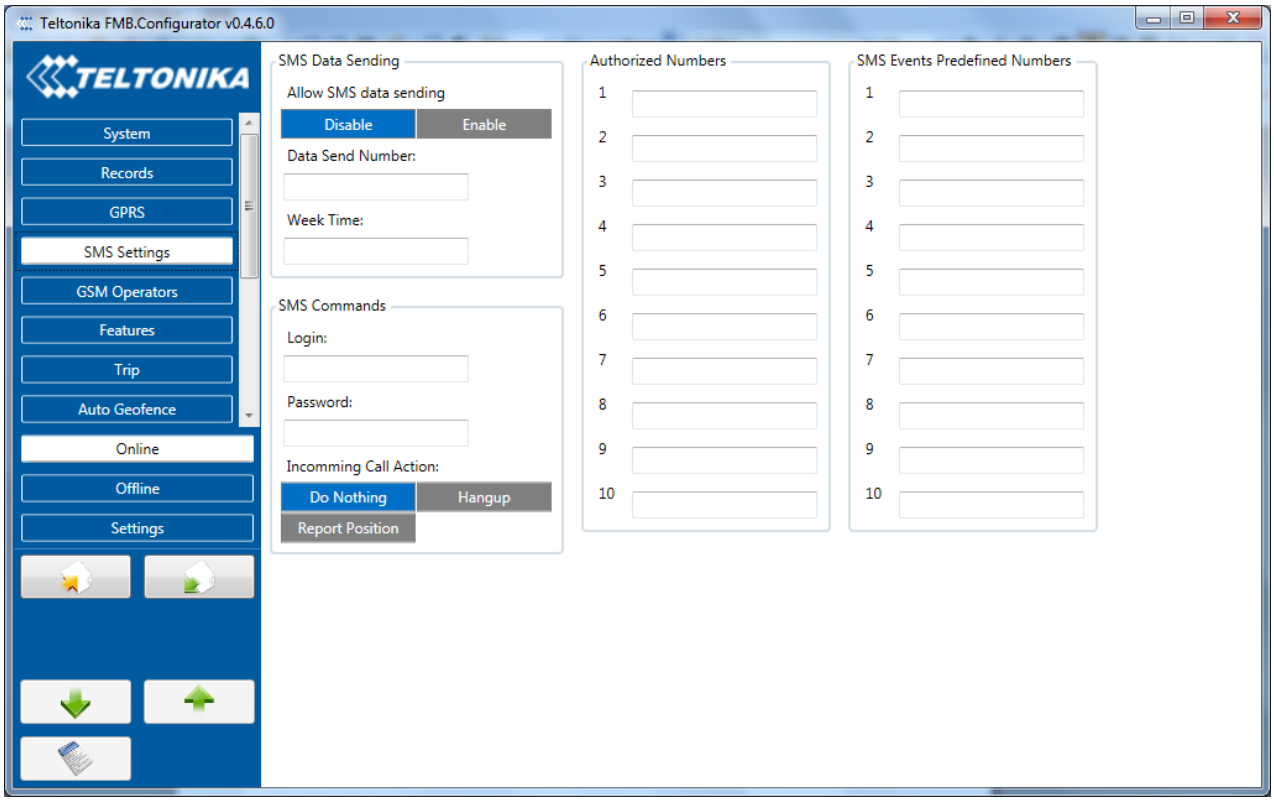

Figure 11 SMS Events PreDefined Numbers list

The sent SMS messages format is according to:

"Date Time EventText"

For example, if FMB920 is configured to send an SMS, when Ignition reaches High level, with priority High and configured to generate event on both range enter and exit (figure 33), then the sent SMS is:

"2012/6/7 12:00:00 Ignition 1"

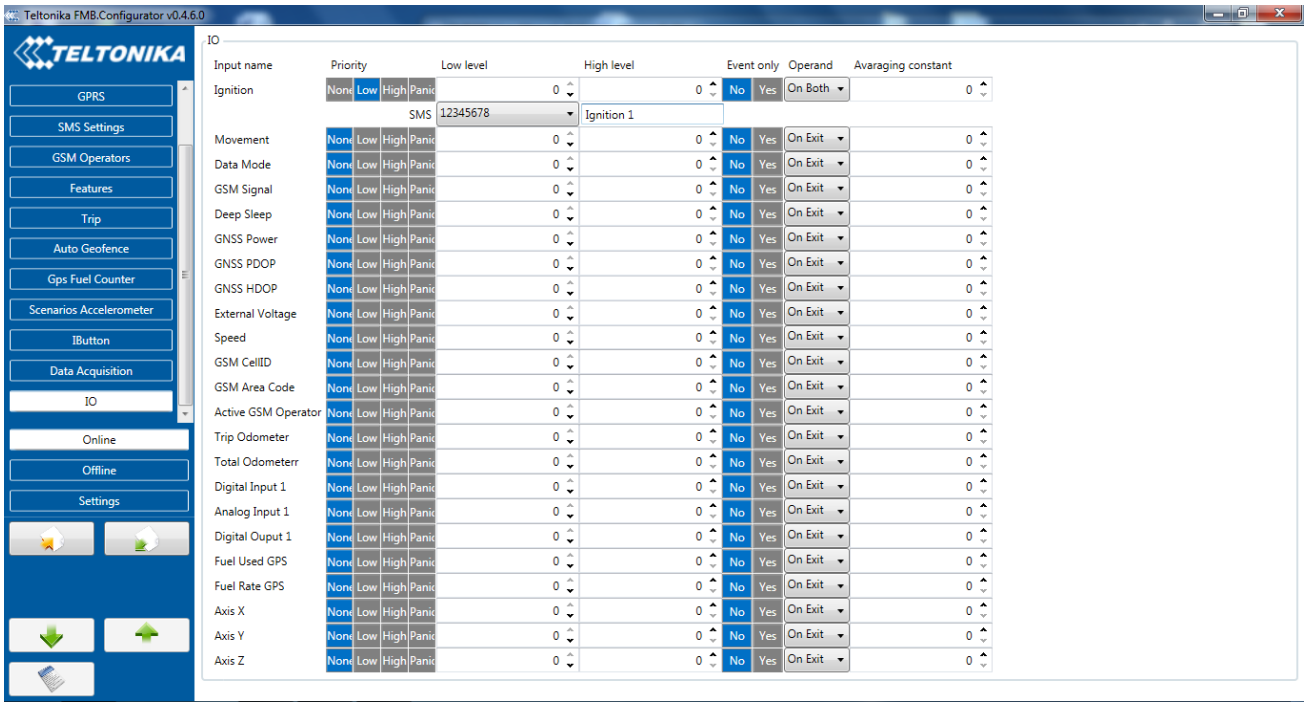

Figure 12 Configured Ignition SMS event

The SMS Text field can be altered and any text can be entered. Maximum message length is 90 symbols (numbers, letters and symbols in ASCII, except for comma “,”).

ATTENTION!
If FMB920 is in Deep Sleep mode and SMS event occurs with LOW priority (which does not wake up FMB920), then the device does not send the message. It is saved in device memory until it wakes up from Deep Sleep mode and GSM modem starts working normally. After it wakes up, all the messages that are saved in memory will be sent, but keep in mind that only 10 messages can be saved in memory – all other messages will not be saved, until there is room in device memory.

4.5 I/O settings

When no I/O element is enabled, AVL packet comes with GNSS information only. After enabling I/O element(s) AVL packet along with GNSS information contains current value(s) of enabled I/O element.

Enabled or disabled field – allows enabling I/O element so it is added to the data packet and is sent to the server. By default all I/O element are disabled and FMB920 records only GNSS coordinates.

Priority (AVL packet priority) all records made by FMB920 are regular. Regular packets are sent as Low priority records. When low priority event is triggered, FMB920 makes additional record with indication that the reason for that was I/O element change.

Table 3 Permanent I/O elements

Permanent I/O elements (are always sent to server if enabled)		
Nr.	Property Name	Description
1	Ignition	Logic: 0 / 1
2	Movement	Logic: 0 / 1
3	Data mode	0 – home on stop, 1 – home on move, 2 – roaming on stop, 3 – roaming on move, 4 – unknown on stop, 5 – unknown on move
4	GSM signal	GSM signal level value in scale 1 – 5
5	Deep sleep	Logic: 0 / 1
6	GNSS power	States: 0 – short circ., 1 – connected. Parameter defines if GPS antenna is short circuit. All the time value will be sent 1. The only condition to get value 0, then antenna is damaged and short circuit.
7	GNSS PDOP	Probability * 10; 0-500
8	GNSS HDOP	Probability * 10; 0-500
9	External Voltage	Voltage: mV, 0 – 30 V
10	Speed	Value in km/h, 0 – xxx km/h
11	GSM Cell ID	GSM base station ID
12	GSM Area Code	Location Area code (LAC), it depends on GSM operator. It provides unique number which assigned to a set of base GSM stations. Max value: 65536
13	Battery Voltage	Shows battery Voltage in mV
14	Battery Current	Shows battery Current in mA
15	Active GSM operator	Currently used GSM Operator code
16	Trip odometer	Distance between two records: m
17	Total odometer	Total odometer count: m
18	Cell ID	GSM base station ID
19	Digital Input 1	Logic: 0 / 1
20	Analog Input 1	Voltage: mV, 0 – 30 V
21	Digital output 1	Logic: 0 / 1
22	Fuel Used GPS	Fuel used (ml) by GPS
23	Fuel Rate GPS	Fuel Consumption by average speed (l/100km)
24	Axis X	Accelerometer axis x value
25	Axis Y	Accelerometer axis y value
26	Axis Z	Accelerometer axis z value

5 SMS COMMAND LIST

All commands are case sensitive. While FMB900 operates in Sleep mode and user tries to send SMS message it will arrive to FMB900 device, because GSM module is enabled. Only GNSS module is disabled in sleep mode.

5.1 SMS command list

Table 4 SMS commands

Command	Description	Response
getinfo	Returns RTC time, GPS status, SAT	Yes
getver	Returns code version, device IMEI, modem app version, RTC time	Yes
getstatus	Returns Data Link:0 GPRS:0 Phone:0 SIM:0 OP:24602 Signal:5 NewSMS:0 Roaming:0 SMSFull:0 LAC:0 Cell ID: 0	Yes
getgps	Returns GPS status, Satellite number, Latitude, Longitude, Altitude, Speed, Date, Time	Yes
ggps	Returns location information with Google maps link	Yes
readio	Returns IO status	Yes
cpureset	Resets device	No
getparam	Returns selected parameter value	Yes
setparam	Sets selected parameter value	Yes
flush	Redirects device to other server	Yes
countrecs	Returns record number	Yes
setdigout	Sets digital output on or off	Yes
runcmd:<serial cmd>	Runs any serial command	Yes
wdlog	Debug SMS	Yes
fc_reset	Resets fuel consumption parameters	Yes
towingreact	Towing reactivation	Yes

Setparam SMS is used to configure device. Parameter ID consists of 3 or 5 digits. Detailed list of parameters and IDs can be found in chapter number 5.2 “System parameters”

Example: ‘username password setparam 102:0’ will disable sleep mode.

5.2 System parameters

Sleep Mode (ID=102)

Device has two sleep modes: sleep and deep sleep mode. While sleep is disabled (value 0) module will never enter sleep mode, in sleep mode (value 1) module reduces level of power usage by turning GPS module to sleep, in deep sleep mode (value 2) module turns GPS module to sleep and device is deregistered from network (note, that FMB900 do not receive SMS while in deep sleep).

Minimum value	Maximum value	Recommended value	Goes with (depends on) parameters	Value type
0	2	-		U8

Sleep timeout (ID=103)

Sleep timeout is time after which FMB900 goes to sleep or deep sleep if other requirements are met. It is measured in minutes.

Minimum value	Maximum value	Recommended value	Goes with (depends on) parameters	Value type
1	3000	-		U8

Movement Source (ID=100)

Device can operate and change its working mode according to motion detection source: ignition (value 0), movement sensor (value 1), GPS (value 2).

Minimum value	Maximum value	Recommended value	Goes with (depends on) parameters	Value type
0	2	-		U8

Static Navigation (ID=106)

When static navigation is enabled, FMB900 filters out GPS jumps, when it is not moving. When it is disabled, it does not make any changes to collected GPS data.

Minimum value	Maximum value	Recommended value	Goes with (depends on) parameters	Value type
0	1	1		U8

Saving/Sending without time synchronization (ID=107)

When this feature is enabled (value = 1), then records can be saved and sent to server without time synchronization.

Minimum value	Maximum value	Recommended value	Goes with (depends on) parameters	Value type
0	1	1		U8

GNSS Source (ID=109)

This parameter sets Satellite System, available values:

Beidou only value:1
Glonass only value:2
Galileo only value:4
Galileo+Beidou value:5
Galileo+Glonass value:6
Gps only value:8
Gps+Beidou value:9
Gos+Glonass value:10
Gps+Galileo value:12
Gps+Galileo+Beidou value:13
Gps+Galileo+Glonass value:14

Minimum value	Maximum value	Recommended value	Goes with (depends on) parameters	Value type
0	14	-		U8

Ignition settings (ID=101)

This parameter sets ignition source available values : 0 – Power voltage, 1 – Digital Input, 2– Accelerometer.

Minimum value	Maximum value	Recommended value	Goes with (depends on) parameters	Value type
0	2	0		U8

High voltage level (ID=104)

Sets high level of voltage if ignition settings is set to power voltage.

Minimum value	Maximum value	Recommended value	Goes with (depends on) parameters	Value type
0	30000	30000		U8

Low voltage level (ID=105)

Sets low level of voltage if ignition settings is set to power voltage.

Minimum value	Maximum value	Recommended value	Goes with (depends on) parameters	Value type
0	29999	13000		U8

Led indication (ID=108)

Sets led indication: 0 – disabled, 1 – enabled

Minimum value	Maximum value	Recommended value	Goes with (depends on) parameters	Value type
0	1	1		U8

5.3 Records parameters

Sorting (ID=1002)

Record sorting parameter is responsible for record sorting order. Value of 0 arranging data starting from newest, while value of 1 arranging data starting from oldest.

Minimum value	Maximum value	Recommended value	Goes with (depends on) parameters	Value type
0	1	-		U8

Open Link Timeout (ID=1000)

Defines for how many seconds device will keep connection to the server after successful data transfer while waiting for a new record.

Minimum value	Maximum value	Recommended value	Goes with (depends on) parameters	Value type
0	259200	-		U32

Server Response Timeout (ID=1001)

Defines time period (in seconds) for server response to sent records.

Minimum value	Maximum value	Recommended value	Goes with (depends on) parameters	Value type
5	300	-		U8

ATTENTION! Some GSM operators may disconnect the device from an active data link if the device doesn't send any data for a very long time, even if active data link timeout is set to maximum value. The amount of time that an operator keeps the link open depends solely on the operator. For example, if active data link timeout is set to maximum, 259200 seconds (72 hours), and the device sends data to server every 86400 seconds (24 hours), the operator might disconnect the link earlier and the device will have to connect to the server anew. This may cost extra, depending on the operator GPRS data charge. It is strongly recommended, when using active data link timeout, that data sending to the server should not be very rare (24 hours or more). If data sending is more frequent, then the operator will not disconnect the device form the server.

5.4 GSM parameters

GPRS content activation (ID=2000)

Parameter allows or does not allow GPRS usage. If GPRS is not allowed value is 0, if GPRS is allowed value is 1.

Minimum value	Maximum value	Recommended value	Goes with (depends on) parameters	Value type
0	1	-	**APN Name (ID=2001)** **APN username (ID=2002)** **APN Password (ID=2003)**	S8

APN Name (ID=2001)

Parameter defines GPRS Access Point Name.

Minimum value	Maximum value	Recommended value	Goes with (depends on) parameters	Value type
Empty	32 char string	-	**GPRS content activation (ID=2000)** **APN username (ID=2002)** **APN Password (ID=2003)**	S8[32]

APN username (ID=2002)

Parameter defines APN username. In case operator does not use username for login, value should be empty.

Minimum value	Maximum value	Recommended value	Goes with (depends on) parameters	Value type
Empty	30 char string	-	**GPRS content activation (ID=2000)** **APN Name (ID=2001)** **APN Password (ID=2003)**	S8[30]

APN Password (ID=2003)

Parameter defines APN password. In case operator does not use password for login, value should be empty.

Minimum value	Maximum value	Recommended value	Goes with (depends on) parameters	Value type
Empty	30 char string	-	**GPRS content activation (ID=2000)** **APN Name (ID=2001)** **APN username (ID=2002)**	S8[30]

Domain (ID=2004)

Parameter defines AVL data destination server IP address. Example: 212.47.99.62

Minimum value	Maximum value	Recommended value	Goes with (depends on) parameters	Value type
0	54 char string	-	**GPRS content activation (ID=2000)**	S8[16]

Target Server Port (ID=2005)

Parameter defines AVL data destination server port number. Example: 12050

Minimum value	Maximum value	Recommended value	Goes with (depends on) parameters	Value type
Empty	65535	-	**GPRS content activation (ID=2000)**	U16

Protocol (ID=2006)

Parameter defines GPRS data transport protocol. Module can use TCP or UDP transport protocol to send data to server. For TCP protocol value is 0, for UDP protocol value is 1.

Minimum value	Maximum value	Recommended value	Goes with (depends on) parameters	Value type
0	1	-	**GPRS content activation (ID=2000)**	U8

5.6 SMS settings

SMS data sending settings (ID=3000)

Parameter allows or does not allow sending AVL data using binary SMS. If SMS use is not allowed value is 0 and 1 if SMS use is allowed.

Minimum value	Maximum value	Recommended value	Goes with (depends on) parameters	Value type
0	1	-	**Data send number (ID=3001)** **In this** field are written GSM numbers, to which will be sent Data SMS. Minimum value: 1 digit; Maximum value: 16 digits; Recon v:	S8

Data send number (ID=3001)

In this field are written GSM numbers, to which will be sent Data SMS.

Minimum value	Maximum value	Recommended value	Goes with (depends on) parameters	Value type
1 digit	16 digits	-	Error! Not a valid bookmark self-reference.	S8

Authorized phone numbers (ID=4000-4009)

If at least one number is entered then only those number can send messages to device. Number must be entered without “+” or “00”.

Example: 37060012346

Minimum value	Maximum value	Recommended value	Goes with (depends on) parameters	Value type
1 digit	16 digits	-		S8[17]

SMS Event Predefined Numbers (ID=6000-6009)

In this field GSM numbers are written, to which will be sent “Event SMS” text message. Number must be entered without “+” or “00”.

Example: 37060012346

Minimum value	Maximum value	Recommended value	Goes with (depends on) parameters	Value type
1 digit	16 digits	-		S8[17]

SMS Login (ID=3003)

User login is used to ensure module security. Used in every SMS that is sent to device. Example: ba321

Minimum value	Maximum value	Recommended value	Goes with (depends on) parameters	Value type
Empty	5 char	-	**SMS Password (ID=3004)**	S8[5]

SMS Password (ID=3004)

User password is used to ensure module security. Used in every SMS that is sent to device. Example: ab123

Minimum value	Maximum value	Recommended value	Goes with (depends on) parameters	Value type
Empty	5 char	-		S8[5]

Incoming call action (ID=3005)

Parameter defines action during call: 0 – do nothing, 1 – hang up, 2 – report position

Minimum value	Maximum value	Recommended value	Goes with (depends on) parameters	Value type
0	2	0		S8[17]

Operator List (ID=5000-5049)

Parameter defines operator list. According to this list module selects operating profile. First in a list is *Home Operator Code*, then Preferred Roaming Operator Codes are written.

Minimum value	Maximum value	Recommended value	Goes with (depends on) parameters	Value type
Empty	7 digits	-		U32

5.7 Data Acquisition Modes parameters

Home Network GSM operator code "Vehicle on STOP" parameters

5.7.1.1 Min Period (ID=10000)

This parameter indicates time interval in seconds in order to acquire new record. If value is 0 it means no records by min period will be saved.

Minimum value	Maximum value	Recommended value	Goes with (depends on) parameters	Value type
0	2592000	-		U32

5.7.1.2 Min Saved Records (ID=10004)

This parameter defines minimum number of records in one data packet that can be sent to server. It has higher priority than Data Send Period (ID=10005).

Minimum value	Maximum value	Recommended value	Goes with (depends on) parameters	Value type
1	255	1		U8

5.7.1.3 Send Period (ID=10005)

This parameter indicates frequency (time interval in seconds) of sending data to server.

Minimum value	Maximum value	Recommended value	Goes with (depends on) parameters	Value type
0	2592000	-	**Min Saved Records (ID=10004)**	U32

Home Network GSM operator code "Vehicle MOVING" parameters

5.7.2.1 Min Period (ID=10050)

This parameter indicates time interval in seconds in order to acquire new record. If value is 0 it means no records by min period will be saved.

Minimum value	Maximum value	Recommended value	Goes with (depends on) parameters	Value type
0	2592000	-	**Min Distance (ID=10051)** **Min Angle (ID=10052)**	U32

5.7.2.2 Min Distance (ID=10051)

This parameter indicates distance in meters in order to acquire new record. Record is stored when the distance between previous records is greater than parameters value. If value is 0 it means no records by min distance will be saved.

Minimum value	Maximum value	Recommended value	Goes with (depends on) parameters	Value type
0	65535	-	**Min Period (ID=10050)** **Min Angle (ID=10052)**	U32

5.7.2.3 Min Angle (ID=10052)

This parameter indicates angle in degrees in order to acquire new record. If angle difference between last recorded coordinate and current position is greater than defined value, new record is stored. This parameter is operational, when speed is higher than 10km/h. If value is 0 it means no records by min angle will be saved.

Minimum value	Maximum value	Recommended value	Goes with (depends on) parameters	Value type
0	180	-	**Min Period (ID=10050)** **Min Distance (ID=10051)**	U16

5.7.2.4 Min Speed delta (ID=10053)

This parameter indicates speed difference in order to acquire new record. If speed difference between last recorded coordinate and current position is greater than defined value, new record is stored. If value is 0 it means no records by min distance will be saved.

Minimum value	Maximum value	Recommended value	Goes with (depends on) parameters	Value type
0	255	10	**Min Period (ID=10050)** **Min Distance (ID=10051)** **Min Angle (ID=10052)**	U16

5.7.2.5 Min Saved Records (ID=10054)

This parameter defines minimum number of records in one data packet that can be sent to server. It has higher priority than Data Send Period (ID=10055).

Minimum value	Maximum value	Recommended value	Goes with (depends on) parameters	Value type
1	255	1	**Min Period (ID=10050)** **Min Distance (ID=10051)** **Min Angle (ID=10052)**	U8

5.7.2.6 Send Period (ID=10055)

This parameter indicates frequency (time interval in seconds) of sending data to server.

Minimum value	Maximum value	Recommended value	Goes with (depends on) parameters	Value type
0	2592000	-		U32

Roaming Network GSM operator code "Vehicle on STOP" parameters

5.7.3.1 Min Period (ID=10100)

This parameter indicates time interval in seconds in order to acquire new record. If value is 0 it means no records by min period will be saved.

Minimum value	Maximum value	Recommended value	Goes with (depends on) parameters	Value type
0	2592000	-		U32

5.7.3.2 Min Saved Records (ID=10104)

This parameter defines minimum number of records in one data packet that can be sent to server. It has higher priority than Data Send Period (ID=10105).

Minimum value	Maximum value	Recommended value	Goes with (depends on) parameters	Value type
1	255	1		U8

5.7.3.3 Send Period (ID=10105)

This parameter indicates frequency (time interval in seconds) of sending data to server.

Minimum value	Maximum value	Recommended value	Goes with (depends on) parameters	Value type
0	2592000	-	**Min Saved Records (ID=10104)**	U32

Roaming Network GSM operator code "Vehicle MOVING" parameters

5.7.4.1 Min Period (ID=10150)

This parameter indicates time interval in seconds in order to acquire new record. If value is 0 it means no records by min period will be saved.

Minimum value	Maximum value	Recommended value	Goes with (depends on) parameters	Value type
0	2592000	-	**Min Distance (ID=10151)** **Min Angle (ID=10152)**	U32

5.7.4.2 Min Distance (ID=10151)

This parameter indicates distance in meters in order to acquire new record. Record is stored when the distance between previous records is greater than parameter's value. If value is 0 it means no records by min distance will be saved.

Minimum value	Maximum value	Recommended value	Goes with (depends on) parameters	Value type
0	65535	-	**Min Period (ID=10150)** **Min Angle (ID=10152)**	U32

5.7.4.3 Min Angle (ID=10152)

This parameter indicates angle in degrees in order to acquire new record. If angle difference between last recorded coordinate and current position is greater than defined value, new record is stored. This parameter is operational, when speed is higher than 10km/h. If value is 0 it means no records by min angle will be saved.

Minimum value	Maximum value	Recommended value	Goes with (depends on) parameters	Value type
0	180	-	**Min Period (ID=10150)**	U16

5.7.4.4 Min Speed (ID=10153)

This parameter indicates speed difference in order to acquire new record. If speed difference between last recorded coordinate and current position is greater than defined value, new record is stored. If value is 0 it means no records by min distance will be saved.

Minimum value	Maximum value	Recommended value	Goes with (depends on) parameters	Value type
0	255	10	**Min Period (ID=10150)** **Min Distance (ID=10151)** **Min Angle (ID=10152)**	U16

Unknown Network GSM operator code "Vehicle on STOP" parameters

5.7.5.1 Min Period (ID=10200)

This parameter indicates time interval in seconds in order to acquire new record. If value is 0 it means no records by min period will be saved.

Minimum value	Maximum value	Recommended value	Goes with (depends on) parameters	Value type
0	2592000	-		U32

5.7.5.2 Min Saved Records (ID=10204)

This parameter defines minimum number of records in one data packet that can be sent to server. It has higher priority than Data Send Period (ID=10205).

Minimum value	Maximum value	Recommended value	Goes with (depends on) parameters	Value type
1	255	1		U8

5.7.5.3 Send Period (ID=10205)

This parameter indicates frequency (time interval in seconds) of sending data to server.

Minimum value	Maximum value	Recommended value	Goes with (depends on) parameters	Value type
0	2592000	-	**Min Saved Records (ID=10204)**	U32

Unknown Network GSM operator code "Vehicle MOVING" parameters

5.7.6.1 Min Period (ID=10250)

This parameter indicates time interval in seconds in order to acquire new record. If value is 0 it means no records by min period will be saved.

Minimum value	Maximum value	Recommended value	Goes with (depends on) parameters	Value type
0	2592000	-	**Min Distance (ID=10151)** **Min Angle (ID=10152)**	U32

5.7.6.2 Min Distance (ID=10251)

This parameter indicates distance in meters in order to acquire new record. Record is stored when the distance between previous records is greater than parameter's value. If value is 0 it means no records by min distance will be saved.

Minimum value	Maximum value	Recommended value	Goes with (depends on) parameters	Value type
0	65535	-	**Min Period (ID=10150)** **Min Angle (ID=10152)**	U32

5.7.6.3 Min Angle (ID=10252)

This parameter indicates angle in degrees in order to acquire new record. If angle difference between last recorded coordinate and current position is greater than defined value, new record is stored. This parameter is operational, when speed is higher than 10km/h. If value is 0 it means no records by min angle will be saved.

Minimum value	Maximum value	Recommended value	Goes with (depends on) parameters	Value type
0	180	-	**Min Period (ID=10150)**	U16

5.7.6.4 Min Speed (ID=10253)

This parameter indicates speed difference in order to acquire new record. If speed difference between last recorded coordinate and current position is greater than defined value, new record is stored. If value is 0 it means no records by min distance will be saved.

Minimum value	Maximum value	Recommended value	Goes with (depends on) parameters	Value type
0	255	10	**Min Period (ID=10150)** **Min Distance (ID=10151)** **Min Angle (ID=10152)**	U16

5.8 Features Parameters

Green driving priority (ID=11000)

Defines priority of green driving scenario:

0 – disabled, 1 – low, 2 – high, 3 – panic

Minimum value	Maximum value	Recommended value	Goes with (depends on) parameters	Value type
0	3	-		U8

Max Acceleration Force (ID=11004)

It is max allowed acceleration force which can be reached while accelerating without triggering harsh acceleration event.

Minimum value	Maximum value	Recommended value	Goes with (depends on) parameters	Value type
0	1	0.25		Float

Max Braking Force (ID=11005)

It is max allowed braking force which can be reached while braking without triggering harsh braking event.

Minimum value	Maximum value	Recommended value	Goes with (depends on) parameters	Value type
0	1	0.35		Float

Max Cornering (ID=11006)

It is max allowed cornering angle which can be reached while cornering without triggering harsh cornering event.

Minimum value	Maximum value	Recommended value	Goes with (depends on) parameters	Value type
0	1	-		U16

Green driving digital output control settings (ID=11003)

Sets digital output off (0) or on (1)

Minimum value	Maximum value	Recommended value	Goes with (depends on) parameters	Value type
0	1	0		Float

Green driving Digital output on duration (ID=11001)

Output ON duration in mili-seconds

Minimum value	Maximum value	Recommended value	Goes with (depends on) parameters	Value type
0	2147483647	0		Float

Green driving Digital output off duration (ID=11002)

Output OFF duration in in mili-seconds

Minimum value	Maximum value	Recommended value	Goes with (depends on) parameters	Value type
0	2147483647	0		Float

Overspeeding priority (ID=11100)

Defines priority of overspeeding scenario:

0 – disabled, 1 – low, 2 – high, 3 – panic

Minimum value	Maximum value	Recommended value	Goes with (depends on) parameters	Value type
0	3	-		U8

Max allowed Speed (ID=11104)

It is max allowed speed which can be reached. If this value exceeded Over speeding event will occur.

Minimum value	Maximum value	Recommended value	Goes with (depends on) parameters	Value type
0	260	-		U16

Overspeeding output control (ID=11103)

Enables (1) or disables (0) overspeeding output control

Minimum value	Maximum value	Recommended value	Goes with (depends on) parameters	Value type
0	1	0		Float

Overspeeding Digital output on duration (ID=11101)

Output ON duration in mili-seconds

Minimum value	Maximum value	Recommended value	Goes with (depends on) parameters	Value type
0	2147483647	0		Float

Overspeeding Digital output off duration (ID=11102)

Output OFF duration in mili-seconds

Minimum value	Maximum value	Recommended value	Goes with (depends on) parameters	Value type
0	2147483647	0		Float

Excessive idling priority (ID=11200)

Defines priority of Excessive idling scenario:

0 – disabled, 1 – low, 2 – high, 3 – panic

Minimum value	Maximum value	Recommended value	Goes with (depends on) parameters	Value type
0	3	-		U8

Eventual records (ID=11203)

Disables (0) or enables (1) eventual records with idling value

Minimum value	Maximum value	Recommended value	Goes with (depends on) parameters	Value type
0	1	-		U16

Excessive idling time to stopped (ID=11205)

Defines time in seconds of excessive idling while vehicle is not moving

Minimum value	Maximum value	Recommended value	Goes with (depends on) parameters	Value type
0	255	0		Float

Excessive idling time to moving (ID=11206)

Defines time in seconds of excessive idling while vehicle is moving

Minimum value	Maximum value	Recommended value	Goes with (depends on) parameters	Value type
0	255	0		Float

Excessive idling output control (ID=11204)

Enables (1) or disables (0) Excessive idling output control

Minimum value	Maximum value	Recommended value	Goes with (depends on) parameters	Value type
0	1	0		U16

Excessive idling output on duration (ID=11201)

Output ON duration in seconds

Minimum value	Maximum value	Recommended value	Goes with (depends on) parameters	Value type
0	2147483647	0		Float

Excessive idling output off duration (ID=11202)

Output OFF duration in seconds

Minimum value	Maximum value	Recommended value	Goes with (depends on) parameters	Value type
0	2147483647	0		Float

Trip priority priority (ID=11800)

Defines priority of trip scenario:

0 – disabled, 1 – low, 2 – high, 3 – panic

Minimum value	Maximum value	Recommended value	Goes with (depends on) parameters	Value type
0	3	-		U8

Start Speed (ID=11803)

This parameter represents speed, which is detected as minimum speed to indicate TRIP START and generate event.

Minimum value	Maximum value	Recommended value	Goes with (depends on) parameters	Value type
0	255	-	**Trip (ID=11800)**	U8

Ignition Off Timeout (ID=11804)

This parameter represents timeout to wait if ignition is off in order to detect TRIP STOP and generate event.

Minimum value	Maximum value	Recommended value	Goes with (depends on) parameters	Value type
0	65535	-	**Trip (ID=11800)**	U16

Trip mode (ID=11802)

For this feature I/O ODOMETER must be enabled. If I/O ODOMETER is enabled, and mode is set to Continuous (value 0), TRIP distance is going to be counted till the end of trip, if between records mode is set, ODOMETER will count distance only between two records.

Minimum value	Maximum value	Recommended value	Goes with (depends on) parameters	Value type
0	1	-	**Trip (ID=11800)**	U8

AutoGeofencing

5.8.24.1 AutoGeofencing priority (ID=20000)

Defines priority of trip scenario:

0 – disabled, 1 – low, 2 – high, 3 – panic

Minimum value	Maximum value	Recommended value	Goes with (depends on) parameters	Value type
0	3	0		U8

5.8.24.2 Activation Timeout (ID=20003)

Parameter represents AutoGeofencing activation timeout in seconds.

Minimum value	Maximum value	Recommended value	Goes with (depends on) parameters	Value type
0	65535	60	**AutoGeofencing priority (ID=20000)**	U16

5.8.24.3 Deactivate by (ID=20005)

Parameter defines Autogeofence deactivation source. Value 0 – for Ignition, - Power Voltage, Digital Input 1

Minimum value	Maximum value	Recommended value	Goes with (depends on) parameters	Value type
0	2	-	**AutoGeofencing priority (ID=20000)**	U8

5.8.24.4 AutoGeofence event generating (ID=20001)

Generate event: 0 – no event, 1 – on entering zone; 2 – on exiting zone; 3 – on both;

Minimum value	Maximum value	Recommended value	Goes with (depends on) parameters	Value type
0	3	2	**AutoGeofencing priority (ID=20000)**	U8

5.8.24.5 Radius (ID=20004)

Parameter represents radius of circle with center device coordinates after activating AutoGeofence feature.

Minimum value	Maximum value	Recommended value	Goes with (depends on) parameters	Value type
0	1000000	100	**AutoGeofencing priority (ID=20000)** **Deactivate by (ID**=20005)	U32

5.9 I/O parameters

I/O properties are additional data sources which are recorded along with usual GPS data.

I/O#1 property parameter Ignition (ID=50000)

Parameter defines I/O property value. Possible values: enabled (1), disabled (0).

Minimum value	Maximum value	Recommended value	Goes with (depends on) parameters	Value type
0	1	-	**I/O#1 property parameter Ignition (ID=50000)** **I/O#1 priority (ID=50001)** **I/O#1 High level (ID=50002)** **I/O#1 Low level (ID=50003)** **I/O#1** logic operand (ID=50004) **I/O#1 averaging length (ID=50005)**	S8

I/O#1 priority (ID=50001)

Parameter defines I/O property type of priority: 0 is disabled, 1 – low, 2 – high, 3 - panic.

Minimum value	Maximum value	Recommended value	Goes with (depends on) parameters	Value type
0	3	0	**I/O#1 property parameter Ignition (ID=50000)** **I/O#1 priority (ID=50001)** **I/O#1 High level (ID=50002)** **I/O#1 Low level (ID=50003)**	S8

			I/O#1 logic operand (ID=50004) **I/O#1 averaging length (ID=50005)**	

I/O#1 High level (ID=50002)

Parameter defines high value of triggered I/O property. This parameter is used to set thresholds for I/O properties to generate events.

Minimum value	Maximum value	Recommended value	Goes with (depends on) parameters	Value type
-2147483647	2147483647	1	**I/O#1 property parameter Ignition (ID=50000)** **I/O#1 priority (ID=50001)** **I/O#1 High level (ID=50002)** **I/O#1 Low level (ID=50003)** **I/O#1** logic operand (ID=50004) **I/O#1 averaging length (ID=50005)**	S32

I/O#1 Low level (ID=50003)

Parameter defines low value of triggered I/O property. This parameter is used to set thresholds for I/O properties to generate events.

Minimum value	Maximum value	Recommended value	Goes with (depends on) parameters	Value type
-2147483647	2147483647	0	**I/O#1 property parameter Ignition (ID=50000)** **I/O#1 priority (ID=50001)** **I/O#1 High level (ID=50002)** **I/O#1 Low level (ID=50003)** **I/O#1** logic operand (ID=50004) **I/O#1 averaging length (ID=50005)**	S32

I/O#1 logic operand (ID=50004)

Parameter defines when event is sent: 0 – on range exit, 1 – on range entrance, 2 – both, 3 – monitoring, 4 – hysteresis, 5 – on changes.

Minimal value	Maximum value	Recommended value	Goes with (depends on) parameters	Value type
0	5	3	**I/O#1 property parameter Ignition (ID=50000)** **I/O#1 priority (ID=50001)** **I/O#1 High level (ID=50002)** **I/O#1 Low level (ID=50003)** **I/O#1** logic operand (ID=50004) **I/O#1 averaging length (ID=50005)**	S8

I/O#1 averaging length (ID=50005)

Parameter defines I/O property sample length to average. If no averaging needed default value is 1.

Minimum value	Maximum value	Recommended value	Goes with (depends on) parameters	Value type
0	2147483647	1	**I/O#1 property parameter Ignition (ID=50000)** **I/O#1 priority (ID=50001)** **I/O#1 High level (ID=50002)** **I/O#1 Low level (ID=50003)** **I/O#1** logic operand (ID=50004) **I/O#1 averaging length (ID=50005)**	S32

Other I/O property elements can be configured in same logic. All I/O element parameters are listed in the next table.

I/O Element Number	I/O element parameters
I/O#0 – Ignition	50000 – 50005
I/O#1 – Movement	50010 – 50015
I/O#2 – Data Mode	50020 – 50025
I/O#3 – GSM Signal	50030 – 50035
I/O#4 – Deep Sleep	50040 – 50045
I/O#5 – GNSS Power	50050 – 50055
I/O#6 – GNSS PDOP	50060 – 50065
I/O#7 – GNSS HDOP	50070 – 50075
I/O#8 – External Voltage	50080 – 50085
I/O#9 – Speed	50090 – 50095
I/O#10 – GSM Cell ID	50100 – 50105
I/O#11 – GSM Area Code	50110 – 50115
I/O#14 – Active GSM Operator	50140 – 50145
I/O#15 – Trip Odometer	50150 – 50155
I/O#16 – Total Odometer	50160 – 50165
I/O#17 – Digital Input	50170 – 50175
I/O#18 – Analog Input	50180 – 50185
I/O#19 – Digital Output	50190 – 50195
I/O#21 – Fuel Used GPS	50200 – 50205
I/O#22 – Fuel Rate GPS	50210 – 50215
I/O#23 – Axis X	50220 – 50225
I/O#24 – Axis Y	50230 – 50235
I/O#25 – Axis Z	50240 – 50245

6 MOUNTING RECOMMENDATIONS

6.1 Connecting Wires

- Wires should be fastened to the other wires or non-moving parts. Try to avoid heat emitting and moving objects near the wires.
- The connections should not be seen very clearly. If factory isolation was removed while connecting wires, it should be applied again.
- If the wires are placed in the exterior or in places where they can be damaged or exposed to heat, humidity, dirt, etc., additional isolation should be applied.
- Wires cannot be connected to the board computers or control units.

6.2 Connecting Power Source

- Be sure that after the car computer falls asleep, power is still available on chosen wire. Depending on car, this may happen in 5 to 30 minutes period.
- When module is connected, measure voltage again to make sure it did not decrease.
- It is recommended to connect to the main power cable in the fuse box.
- Use 3A, 125V external fuse.

6.3 Connecting Ignition Wire

- Be sure to check if it is a real ignition wire – power does not disappear while starting the engine.
- Check if this is not an ACC wire (when key is in the first position, most electronics of the vehicle are available).
- Check if power is still available when you turn off any of vehicles devices.
- Ignition is connected to the ignition relay output. As alternative, any other relay, which has power output when ignition is on, may be chosen.

6.4 Connecting Ground Wire

- Ground wire is connected to the vehicle frame or metal parts that are fixed to the frame.
- If the wire is fixed with the bolt, the loop must be connected to the end of the wire.
- For better contact scrub paint from the place where loop is connected.

PAY ATTENTION! Connecting the power supply must be carried out in a very low impedance point of on-board vehicle network. These points in the car are the battery terminals. Therefore, we recommend connecting the power of FMB920 (GND and POWER wires) directly to the battery terminals. Another valid option is to connect the wires to the main POWER cable inside the fuse box (if there is none, then to the power supply where the fuses of vehicle's computer are), GND wire must be connected in a special point, designed to connect GND vehicle computer. Connecting the GND at an arbitrary point to the mass of the car is unacceptable, as static and dynamic potentials on the line GND will be unpredictable, which can lead to unstable FMB920 operation and even its failure.

7 FMB920 installation instruction

FMB920 is the device that has internal GNSS and GSM antenna.

Device should be mounted with the sticker view to the open sky (metal free). FMB920 area with sticker and GNSS antenna is shown in figure 12.

Figure 12 FMB920 view

Most light vehicles has oblique front window that opens most part of interior front panel.

FMB920 can be mounted under the plastic panel behind the front window, with the sticker direction to a window (sky). It is recommended to place FMB920 behind dashboard as close to the window as possible. A good example of GNSS antenna placement is displayed in a picture below (area colored green).

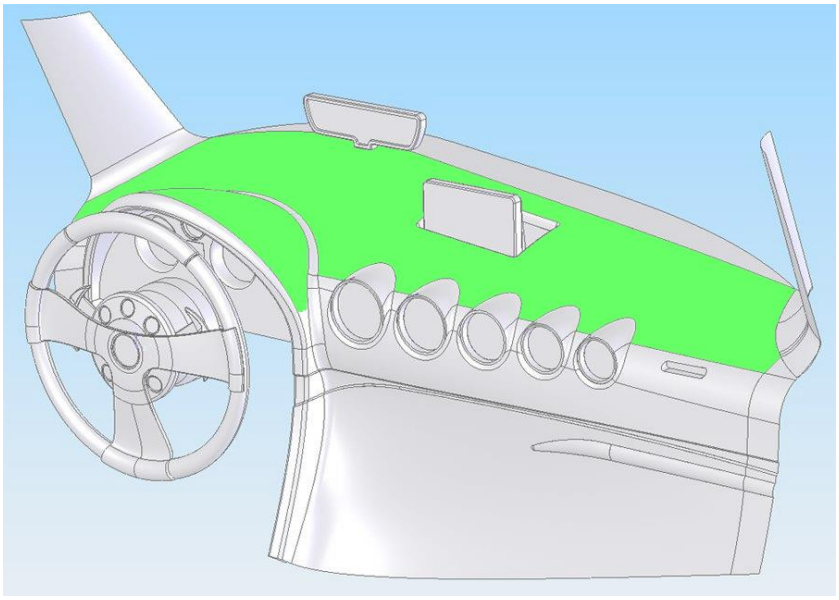

Figure 13 Correct placement of FMB920

8 CHANGE LOG

Nr.	Date	Version	Comments
1	2016-08-25	0.01	Preliminary draft release.
2	2016-10-31	0.02	Preliminary draft release update.
3	2016-11-10	0.03	Preliminary draft release update.
4	2016-11-17	0.04	Removed internal comments.